SP LINE

ED. 17
UPD. 03

Alusic

SAFETY GUARDS FOR AUTOMATIC MACHINES

PROTEZIONI PER MACCHINE AUTOMATICHE
PROTECCIONES PARA MAQUINAS AUTOMATICAS
PROTECTIONS POUR MACHINES AUTOMATIQUES
SCHUZTSYSTEME FUR AUTOMATISCHE MASCHINEN

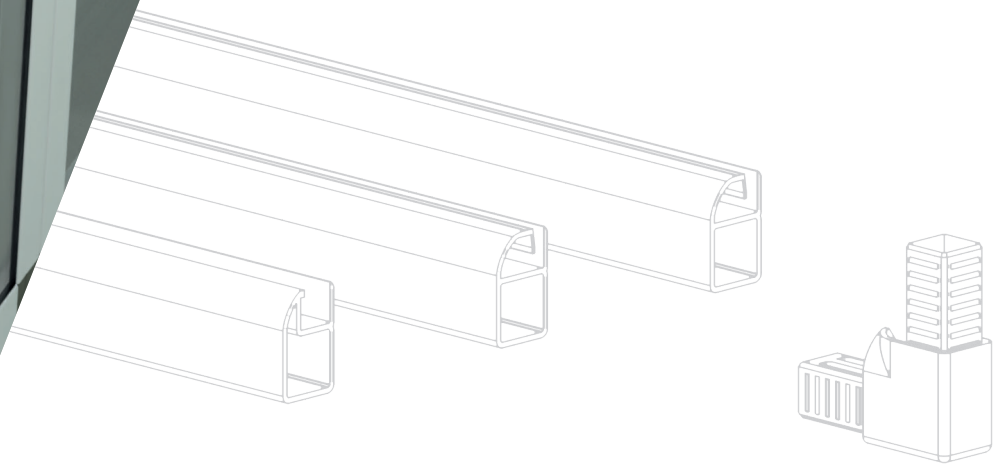

SP LINE

Alusic

SAFETY GUARDS FOR AUTOMATIC MACHINES

PROTEZIONI PER MACCHINE AUTOMATICHE
PROTECCIONES PARA MAQUINAS AUTOMATICAS
PROTECTIONS POUR MACHINES AUTOMATIQUES
SCHUZTSYSTEME FUR AUTOMATISCHE MASCHINEN

EN

The SP Line includes extruded aluminium profiles and accessories to create machine safety guards and railings and perimeter safety guards for automatic machines.

Interlocking joints ensure quick and easy assembly, while the closed profiles prevent dirt build-up and offer an attractive look.

The SP Line catalogue encloses the EVO series, with glass-fibre reinforced nylon joints, and the FPZ series, with polyamide joints reinforced with an aluminium core.
The EVO and FPZ systems are ideal to create frames, structures, casings and guards in all sectors of the packaging industry and in production systems for various sectors such as mechanical engineering, chemical, pharmaceutical, textile and foodstuffs.

IT

Line SP comprende profili in alluminio estruso e accessori per la realizzazione di protezioni antinfortunistiche a bordo macchina e protezioni perimetrali per la messa in sicurezza delle macchine automatiche.

I giunti ad incastro garantiscono una notevole facilità e velocità di montaggio; i profili chiusi evitano l'accumulo di sporco oltre a restituire un ottimo risultato estetico.

Il catalogo Line SP comprende la serie EVO, con giunti in nylon rinforzato con fibra di vetro, e la serie FPZ, con giunti in poliamide rinforzati da un'anima in alluminio.
I sistemi EVO e FPZ trovano applicazione nella realizzazione di telai, strutture, carterizzazioni e protezioni in tutti i settori del packaging e negli impianti di produzione per diversi tipi di settore tra cui quello meccanico, chimico, farmaceutico, tessile e alimentare.

ES

La línea SP incluye perfiles de aluminio extruido y accesorios para fabricar protecciones de maquinaria y protecciones perimetrales para garantizar la seguridad de las máquinas automáticas.

Las uniones por encaje garantizan una gran facilidad y rapidez de montaje; los perfiles cerrados evitan la acumulación de suciedad y permiten obtener un resultado estético excelente.

El catálogo Line SP incluye la serie EVO, con uniones de nailon reforzado con fibra de vidrio, y la serie FPZ, con uniones de poliamida reforzadas con núcleo de aluminio.
Los sistemas EVO y FPZ se utilizan para fabricar bastidores, estructuras, cárteres de cobertura y protecciones para todos los sectores del embalaje y para las instalaciones de producción de distintos sectores como el mecánico, el químico, el farmacéutico, el textil y el alimentario.

FR

La Ligne SP comprend des profilés en aluminium extrudé et des accessoires pour la réalisation de protections de prévention des accidents à installer sur une machine et de protections périmétriques de mise en sécurité des machines automatiques.

Les joints à encastrement garantissent une grande facilité et une grande rapidité de montage; les profilés fermés évitent les dépôts de saletés et garantissent par ailleurs une esthétique irréprochable.

Le catalogue de la Ligne SP comprend la série EVO, avec des joints en nylon renforcé à la fibre de verre, et la série FPZ, avec des joints en polyamide renforcé par une âme en aluminium.
Les systèmes EVO et FPZ permettent la réalisation de châssis, de structures, de carters et de protections dans tous les secteurs du conditionnement et sur les installations de production dans divers secteurs tels que le secteur mécanique, chimique, pharmaceutique, textile et alimentaire.

DE

Die Linie SP umfasst eloxierte Aluminiumprofile und Zubehörteile für Maschinenschutzeinrichtungen und Schutzeinhausungen zur Absicherung von Fertigungsautomaten.

Die Steckverbindungen sichern eine mühelose und schnelle Montage; die geschlossenen Profile vermeiden das Ansammeln von Schmutz und gewährleisten zudem ein hervorragendes ästhetisches Ergebnis.

Der Katalog der Linie SP enthält sowohl die EVO Serie mit Verbindungsstücken aus glasfaserverstärktem Nylon als auch die FPZ Serie mit Aluminiumkern verstärkten Verbindungsstücken aus Polyamid.
Die EVO und FPZ Systeme eignen sich für die Realisierung von Rahmen, Strukturen, Abdeckungen und Schutzeinrichtungen für Verpackungsmaschinen jeglicher Art sowie für Produktionsanlagen in zahlreichen Branchen wie im Maschinenbau, in der Pharmazeutik, in der chemischen sowie in der Textil- und Lebensmittelindustrie.

The reproduction of this catalogue is prohibited without authorization. We reserve the right to make changes to our products to enhance their features.

Alusic

EVO SERIES

SERIE EVO
SERIE EVO
SÉRIE EVO
REIHE EVO

PROFILES / PROFILI / PERFILES / PROFILÉS / PROFILE

25X25

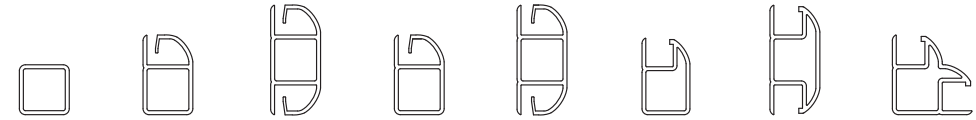

013.025.001 PAG. 15 | 013.025.002 PAG. 15 | 013.025.003 PAG. 16 | 013.025.004 PAG. 18 | 013.025.005 PAG. 18 | 013.025.006 PAG. 20 | 013.025.007 PAG. 21 | 013.025.008 PAG. 21

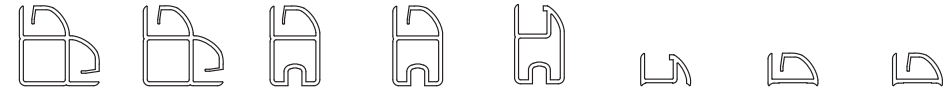

013.025.009 PAG. 16 | 013.025.010 PAG. 19 | 013.025.011 PAG. 17 | 013.025.012 PAG. 19 | 013.025.013 PAG. 22 | 013.025.014 PAG. 22 | 013.025.015 PAG. 17 | 013.025.016 PAG. 20

30X30

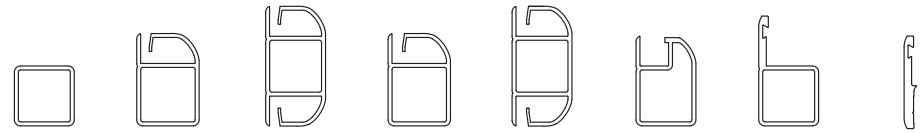

013.030.001 PAG. 23 | 013.030.002 PAG. 23 | 013.030.003 PAG. 24 | 013.030.004 PAG. 25 | 013.030.005 PAG. 26 | 013.030.006 PAG. 27 | 013.030.007 PAG. 29 | 013.030.017 PAG. 29

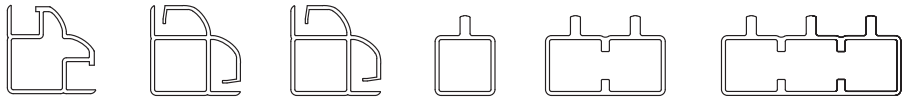

013.030.008 PAG. 28 | 013.030.009 PAG. 24 | 013.030.010 PAG. 26 | 013.030.011 PAG. 30 | 013.030.012 PAG. 30 | 013.030.018 PAG. 31

013.030.013 PAG. 31 | 013.030.019 PAG. 32 | 013.030.014 PAG. 28 | 013.030.015 PAG. 25 | 013.030.016 PAG. 27

SPECIALI SPECIALS ESPECIALES SPÉCIAUX BESONDERE

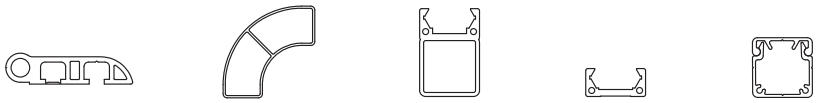

013.000.003A PAG. 86 | 013.030.020 PAG. 32 | 013.030.021 PAG. 33 | 013.030.022 PAG. 33 | 084.101.092 084.101.093 PAG. 34

The reproduction of this catalogue is prohibited without authorization. We reserve the right to make changes to our products to enhance their features.

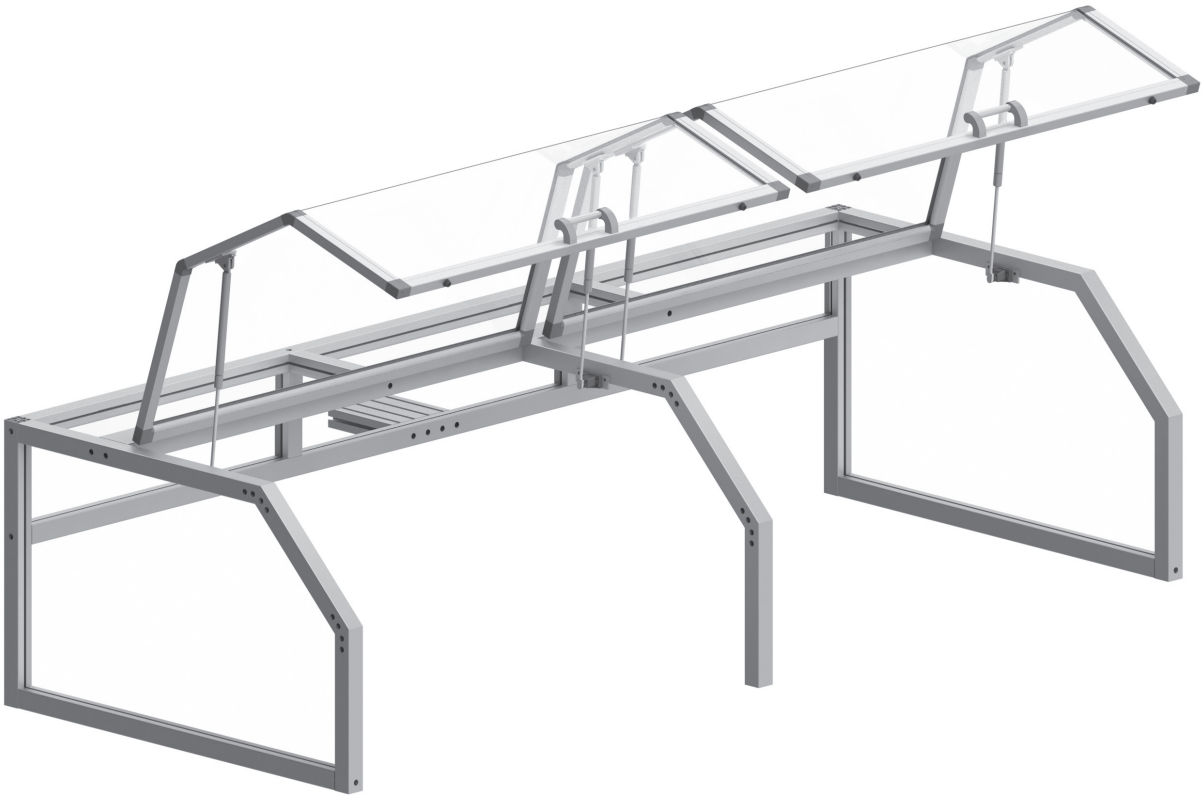

The reproduction of this catalogue is prohibited without authorization. We reserve the right to make changes to our products to enhance their features.

SCREWS / VITERIA / TORNILLOS / VIS / SCHRAUBEN

pag. 41

pag. 43

CONNECTORS / GIUNTI / JUNTAS / ÉLEMENTS DE LIAISON / BEFESTIGUNGSELEMENTE

pag. 51

pag. 56

pag. 67

FRAMES / CORNICI / MARCOS / CADRES / RAHMEN

pag. 70

FEET/ PIEDI / PIES / PIEDS / STELLFÜSSE

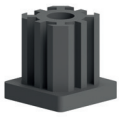
pag. 78

pag. 78

PANELS / PANNELLI / PANELES / PANNEAUX / PLATTEN

pag. 80

pag. 82

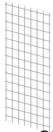
pag. 85

HINGES / CERNIERE / BISAGRAS / CHARNIÈRES / SCHARNIERE

pag. 86

pag. 95

HANDLES / MANIGLIE / MANIJAS / POIGNÉES / GRIFFE

pag. 98

pag. 103

ACCESSORIES FOR DOORS / ACCESSORI PER SPORTELLI / ACCESORIOS PARA PUERTAS / ACCESSOIRES POUR PORTES / ZUBEHÖR FÜR TORE

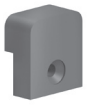
pag. 109

pag. 121

pag. 123

The reproduction of this catalogue is prohibited without authorization. We reserve the right to make changes to our products to enhance their features.

TOOLS / UTENSILI / HERRAMIENTAS / OUTILS / WERKZEUGE

pag. 132

pag. 133

pag. 133

pag. 134

ASSEMBLY SYSTEMS / SISTEMI DI MONTAGGIO / SISTEMAS DE MONTAJE / SISTÈMES DE MONTAGE / MONTAGESYSTEME

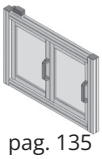

pag. 135

The reproduction of this catalogue is prohibited without authorization. We reserve the right to make changes to our products to enhance their features.

EN

EVO is the complete and versatile Alusic range designed specifically to provide high-quality solutions for machine guards and railings which can be easily incorporated into the machine system.

Each and every detail contained in the catalogue has been designed specifically to ensure that the products comply with the Machinery Directive 2006/42/EC and to allow manufacturers to achieve the best possible results while reducing their assembly time.

The particular geometry of the accessories does not require complex work on the EVO series profiles, a particularly low-cost range with two significant advantages: optimised assembly time and reduced machining costs.
In addition to their functionality, the design focused particularly on the aesthetic aspect to ensure a range of components with well-balanced lines.
The product range is supported by fast and complete service, an advantage deriving from the immediate availability of the items in our warehouse.

IT

EVO è la linea Alusic versatile e completa ideata appositamente per offrire soluzioni di qualità per la realizzazione di protezioni a bordo macchina facilmente integrabili nel sistema macchina.

Ogni dettaglio degli articoli presenti all'interno del catalogo è stato studiato per ottenere un prodotto in linea con la Direttiva macchine 2006/42/CE e per mettere il costruttore nella condizione di ottenere il massimo risultato riducendo i tempi di montaggio.

La particolare geometria degli accessori non richiede lavorazioni complesse sui profili della serie EVO, una linea estremamente economica con due importanti vantaggi: l'ottimizzazione dei tempi di montaggio e la riduzione dei costi di lavorazione.
Oltre alla funzionalità, nella progettazione è stata posta particolare attenzione all'estetica conferendo ai componenti linee armoniose ed equilibrate.
Il pacchetto di prodotti è accompagnato da un servizio rapido e completo, punto di forza derivante dalla disponibilità immediata degli articoli presso i nostri magazzini.

ES

EVO es la línea Alusic versátil y completa que ofrece soluciones de calidad para la fabricación de protecciones incorporadas en la máquina que se integran fácilmente en el sistema máquina.

Se ha estudiado cada detalle de los artículos presentes en el catálogo para obtener un producto conforme a la Directiva 2006/42/CE relativa a las máquinas y para que el fabricante pueda obtener el máximo resultado reduciendo los tiempos de montaje.

Gracias a la geometría especial de los accesorios no es necesario realizar mecanizados complejos en los perfiles de la serie EVO, una línea sumamente económica con dos ventajas importantes: la optimización de los tiempos de montaje y la reducción de los costes de producción.
En el diseño se ha ido más allá de la funcionalidad y se ha prestado especial atención a la estética, dotando a los componentes de líneas armoniosas y equilibradas.
El paquete de productos se acompaña con un servicio rápido y completo, ventaja derivada de la disponibilidad inmediata de los artículos en nuestros almacenes.

FR

EVO est la ligne Alusic flexible et complète spécialement conçue pour offrir des solutions de qualité afin de réaliser des protections à installer sur une machine et faciles à intégrer au système de la machine elle-même.

Chaque détail des produits du catalogue a été pensé pour obtenir un produit conforme à la Directive Machines 2006/42/CE et pour mettre le constructeur dans des conditions lui permettant d'obtenir un résultat optimal tout en réduisant les temps de montage.

La configuration géométrique particulière des accessoires n'impose pas d'usinages complexes sur les profilés de la série EVO, ligne très économique qui offre deux avantages importants: l'optimisation des temps de montage et la réduction des coûts d'usinage.
En outre, la conception a fait une place très importante à la fonctionnalité tout en accordant une grande attention à l'esthétique en conférant aux différentes pièces des lignes harmonieuses et équilibrées.
La gamme de produits s'accompagne d'un service rapide et complet, atout qui repose sur la disponibilité immédiate des articles dans nos entrepôts.

DE

EVO ist eine vielseitige und komplette Linie, die speziell für hochwertige Lösungen für den Aufbau von Maschinenschutzeinrichtungen entwickelt wurde.

Jedes Detail der Artikel im Katalog wurde so gestaltet, um ein Produkt gemäß der Richtlinie 2006/42/EG zu erhalten, und um den Hersteller in die Lage versetzen, durch Verkürzung der Montagezeiten das maximale Ergebnis zu erreichen.

Die besondere Geometrie der Zubehörteile erfordert keine komplexe Bearbeitung der Serie EVO Profilen, eine preiswerte Linie mit zwei große Vorteile: Optimierung der Montagezeiten und Reduzierung der Bearbeitungskosten.
Neben der Funktionalität, besonderes Augenmerk auf die Ästhetik des Designs gelegt wurde, um den Komponenten harmonische und ausgewogene Linien zu geben.
Das Produktangebot enthält einen schnellen und kompletten Kundendienst, dank der sofortigen Verfügbarkeit von Artikeln in unseren Lagern.

The reproduction of this catalogue is prohibited without authorization. We reserve the right to make changes to our products to enhance their features.

JOINTS

GIUNTI / JUNTAS / JOINTS / VERBINDER

EN

Product technical specifications:

Glass-fibre reinforced semi-crystalline polyamide (PA6+GF) - Colour: RAL 7023
The glass-fibre reinforcement allows the joints to be used in high-temperature environments (up to 110° C at constant temperature and up to 240° C for short periods), and also increases the wear resistance compared to the base polymer.

IT

Caratteristiche tecniche del prodotto:

Materiale termoplastico parzialmente cristallino + sfere vetro (PA6+GF) - Colore: RAL 7023
La carica in sfere di vetro, permette ai giunti di essere impiegati in ambienti con temperature elevate (fino a 110°c in continuo e per tempi brevi anche fino a 240°c) inoltre aumenta la resistenza all'usura rispetto al polimero base.

ES

Características técnicas del producto:

Material termoplástico parcialmente cristalino + esferas de vidrio (PA6+GF) - Color: RAL 7023
La carga en esferas de vidrio permite que las juntas se utilicen en ambientes con altas temperaturas (hasta 110 °C de forma continua y por tiempos cortos incluso hasta 240 °C) y también aumenta la resistencia al desgaste en comparación con el polímero base

FR

Caractéristiques techniques du produit:

Matériau thermoplastique semi-cristallin + billes de verre (PA6+GF) - Couleur : RAL 7023
La présence de billes de verre permet d'utiliser les joints dans des environnements exposés à des hautes températures (jusqu'à 110 °C en exposition constante et jusqu'à 240 °C pour bref exposition) ainsi que d'augmenter la résistance à l'usure par rapport au polymère de base.

DE

Technische Produkmerkmale:

Semilkristalliner Thermoplast + Glaskugeln (PA6+GF) - Farbe: RAL 7023
Die Verstärkung mit Glaskugeln ermöglicht die Verwendung der Verbinder in Hochtemperaturbereichen (bei konstanter Temperatur bis 110 °C und kurzzeitig bis 240 °C) und erhöht die Verschleißbeständigkeit gegenüber dem Basispolymer.

Mechanical characteristics: **• Good impact strength** **• Extremely durable** **• High fatigue strength** **• Wear resistance** Caratteristiche meccaniche: • Buona resistenza all'urto • Buona resistenza all'invecchiamento • Elevata resistenza alla fatica • Resistenza all'usura Características mecánicas: • Buena resistencia al impacto • Durable • Alta resistencia a la fatiga • Resistencia al desgaste Caractéristiques mécaniques: • Bonne résistance aux chocs • Durable • Haute résistance à la fatigue • Résistance à l'usure Mechanische Eigenschaften: • Gute Schlagfestigkeit • Gute Alterungsbeständigkeit • Hohe Ermüdungsbeständigkeit • Verschleißbeständigkeit	**Not affected by the following chemicals:** **• Petrol** **• Hydrocarbons** **• Oils and grease** **• Alkaline solutions in general** Resistente a: • Benzina • Idrocarburi • Olii e grassi • Soluzioni alcaline in genere Resistente a: • Gasolina • Hidrocarburos • Aceites y grasas • Soluciones alcalinas en general Résistant à: • Essence • Hydrocarbures • Huiles et graisses • Solutions alcalines en général Beständig gegen: • Benzin • Kohlenwasserstoffe • Öle und Fette • Alkalische Lösungen allgemein

The reproduction of this catalogue is prohibited without authorization. We reserve the right to make changes to our products to enhance their features.

The joints must be installed after the application of the rapid adhesive; insert them in the profiles using a rubber mallet, avoiding to damage the joint, following the sequence shown in the images below:

I giunti devono essere montati applicando della colla a presa rapida e inseriti successivamente nei profili utilizzando un martello in gomma, facendo attenzione a non rovinare il giunto, rispettando la sequenza riportata nelle immagini sottostanti:

Las uniones se montan aplicando cola de secado rápido y posteriormentente se introducen en los perfiles utilizando un martillo de goma, cuidando de no dañar la junta, respetando la secuencia que se muestra en las imágenes siguientes:

Les joints doivent être assemblés en appliquant de la colle à prise rapide, puis insérés dans les profilés à l'aide d'un marteau en caoutchouc, en ayant soin de ne pas endommager le joint, en respectant la séquence illustrée dans les images ci-dessous:

Schnell abbindender Klebstoff im Profil auftragen und der Verbinder mit einem Gummihammer in das Profil einschieben. Darauf achten, dass der Verbinder nicht beschädigt wird. Siehe die Bilder unten:

❶

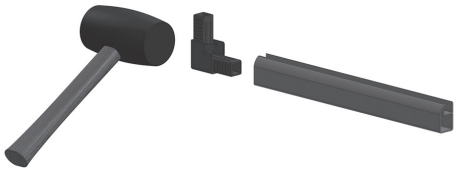

❷

The same joint allows the use of profiles with or without seal:

Con lo stesso giunto si possono usare profili con o senza guarnizione:

Con la misma unión se pueden utilizar perfiles con o sin junta:

Avec le même joint, il est possible d'utiliser des profilés avec ou sans joint pour panneau:

Die Verbinder sind für Profile mit oder ohne Scheibendichtung geeignet:

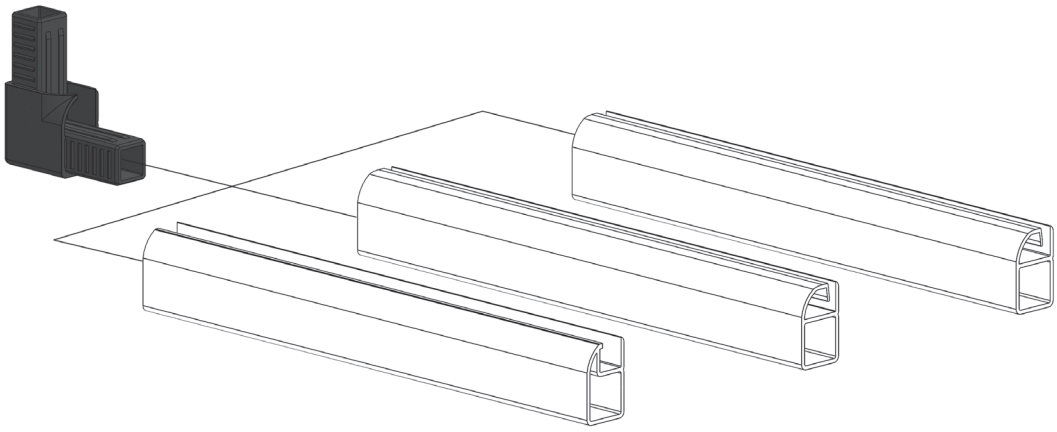

013.025.006 installation with seal / 013.025.002 for 4 mm panel / 013.025.004 for 5 mm panel

013.025.006 montaggio con guarnizione / 013.025.002 per pannello 4 mm / 013.025.004 per pannello 5 mm

013.025.006 montaje con junta / 013.025.002 para panel de 4 mm / 013.025.004 para panel de 5 mm

013.025.006 montage avec garniture / 013.025.002 pour panneau de 4 mm / 013.025.004 pour panneau de 5 mm

013.025.006 Montage mit Scheibendichtung / 013.025.002 für 4-mm-Platte / 013.025.004 für 5-mm-Platte

The reproduction of this catalogue is prohibited without authorization. We reserve the right to make changes to our products to enhance their features.

CHEMICAL COMPOSITION OF ALLOYS

COMPOSIZIONE DELLE LEGHE / COMPOSICIÓN QUÍMICA DE LAS ALEACIONES
COMPOSITION CHIMIQUE DES ALLIAGES / CHEMISCHE ZUSAMMENSETZUNG DER LEGIERUNGEN

EN-AW	Cu	Fe	Mn	Mg	Si	Zn	Cr	Ti	Al
6060	0.10	0.1 - 0.3	0.10	0.35 - 0.6	0.3 - 0.6	0.15	0.05	0.10	dal 98% al 99%
6063	0.10	0.35	0.10	0.45 - 0.9	0.2 - 0.6	0.10	0.10	0.10	dal 97,5% al 98,5%

MECHANICAL PROPERTIES

CARATTERISTICHE MECCANICHE / CARACTERÍSTICAS MECÁNICAS
CARACTÉRISTIQUES MÉCANIQUES / MECHANISCHE EIGENSCHAFTEN

EN-AW	Rm (N/mm²)	Rp0,2 (N/mm²)	A (%)	HB
6060	190	150	8	70
6063	215	170	8	75

PHYSICAL PROPERTIES

CARATTERISTICHE FISICHE / CARACTERÍSTICAS FÍSICAS
CARACTÉRISTIQUES PHYSIQUES / PHYSIKALISCHE EIGENSCHAFTEN

E [N/mm²]	69000
ρ [Ω mm/m]	0.033
λ W/mK	210
T_m (C°)	615 - 655
α (K^{-1})	$25X10^{-6}$

ZERTIFIKAT ◆ CERTIFICATE ◆ 認証書 ◆ СЕРТИФИКАТ ◆ CERTIFICADO ◆ CERTIFICAT

TÜV 500 Italia

CERTIFICATO

Nr. 50 100 6544 Rev.007

Certificati co-titolari collegati / *Connected to the sub-certificate:*
50 100 6544/1

SI ATTESTA CHE / *THIS IS TO CERTIFY THAT*

IL SISTEMA DI GESTIONE PER LA QUALITÀ DI
THE QUALITY MANAGEMENT SYSTEM OF

Alusic

ALUSIC S.r.l.

SEDE LEGALE E OPERATIVA:
REGISTERED OFFICE AND OPERATIONAL SITE:

VIA BOLOGNA 10/A
IT - 12084 MONDOVI' (CN)

SEDI OPERATIVE: **VEDI ALLEGATO 1** / *OPERATIONAL SITES: SEE ANNEX 1*

È CONFORME AI REQUISITI DELLA NORMA
HAS BEEN FOUND TO COMPLY WITH THE REQUIREMENTS OF

UNI EN ISO 9001:2015

QUESTO CERTIFICATO È VALIDO PER IL SEGUENTE CAMPO DI APPLICAZIONE
THIS CERTIFICATE IS VALID FOR THE FOLLOWING SCOPE OF APPLICATION

Progettazione fabbricazione ed assemblaggio di recinzioni modulari in alluminio ed acciaio per la sicurezza industriale, nastri trasportatori ed altre strutture modulari in alluminio ed acciaio. Produzione e commercializzazione di profilati in alluminio, componenti ed accessori (IAF 17, 18, 29)

Design manufacture and assembling aluminium and steel modular shields for safety protection, conveyor belts and other aluminium and steel modular structures. Manufacture and trade of aluminium profiles, components and accessories (IAF 17, 18, 29)

Per l'Organismo di Certificazione
For the Certification Body
TÜV Italia S.r.l.

ACCREDIA
EA/IAF/ILAC/IAF/ILAC/EA/IAF/ILAC

SGQ N° 049A

Membro degli Accordi di Mutuo Riconoscimento EA, IAF e ILAC
Member of EA, IAF and ILAC Mutual Recognition Agreements

Francesco Scariata
Direttore Divisione Business Assurance
Business Assurance Division Manager

Validità / *Validity*
Dal / From: **2022-10-29**
Al / To: **2025-10-28**

Data emissione / *Issuing Date*
2022-10-04

PRIMA CERTIFICAZIONE / *FIRST CERTIFICATION:* 2007-02-20

"LA VALIDITÀ DEL PRESENTE CERTIFICATO È SUBORDINATA A SORVEGLIANZA PERIODICA A 12 MESI E AL RIESAME COMPLETO DEL SISTEMA DI GESTIONE AZIENDALE CON PERIODICITÀ TRIENNALE"
"THE VALIDITY OF THE PRESENT CERTIFICATE DEPENDS ON THE ANNUAL PERIODICAL SURVEILLANCE EVERY 12 MONTHS AND ON THE COMPLETE REVIEW OF COMPANY'S MANAGEMENT SYSTEM AFTER THREE YEARS"

TÜV Italia • Gruppo TÜV SÜD • Via Carducci 125, Pal. 23 • 20099 Sesto San Giovanni (MI) • Italia • www.tuvsud.com/it TÜV®

The reproduction of this catalogue is prohibited without authorization. We reserve the right to make changes to our products to enhance their features.

SYMBOLS / SIMBOLI / SÍMBOLOS / SYMBOLES / SYMBOLE

Box
Scatola
Caja
Boîte
Schachtel

Load
Portata
Carga
Charge
Tragkraft

STAINLESS STEEL

Stainless steel product
Prodotto in inox
Producto de acero inoxidable
Produit en acier inoxydab
Produkt aus rostfreiem Stahl

ITALIAN PATENT

PATENT

Patented product
Prodotto brevettato
Producto patentado
Produit breveté
Patentiertes Produkt

NEW

New product
Prodotto nuovo
Nuevo producto
Nouveau produit
Neues Produkt

The reproduction of this catalogue is prohibited without authorization. We reserve the right to make changes to our products to enhance their features.

Alusic

STANDARD PROFILES

PROFILI STANDARD
PERFILES ESTÁNDARES
PROFILÉS STANDARD
STANDARD-PROFILE

EN

Alusic Line Evo profiles, made to hold panels from 3 to 12 mm, in versions with and without seals, are the ideal solution for the assembly of guards.

The profile joints must be glued to ensure long-term durability and reliability of the assemblies.

IT

I profili Alusic linea Evo, dotati di sedi per pannelli da 3 a 12 mm in versione con e senza guarnizione, sono la soluzione ideale per la realizzazione di ripari.

La giunzione tra i profili necessita di incollaggio per una durata ed affidabilità degli assemblaggi nel tempo.

ES

Los perfiles Alusic line Evo, provistos de alojamientos para paneles de 3 a 12 mm en versión con y sin junta, son la solución perfecta para los resguardos.

La unión entre los perfiles requiere un encolado para garantizar la duración y la calidad del ensamblaje a lo largo del tiempo.

FR

Les profilés Alusic line Evo, dotés de logements pour panneaux de 3 à 12 mm, avec ou sans garniture selon la version, sont la solution idéale pour la réalisation de protections.

La jonction entre les profilés nécessite un collage garantissant la durée et la fiabilité des assemblages dans le temps.

DE

Die mit Aufnahmen für Paneele von 3 bis 12 mm Stärke sowie mit oder ohne Dichtung ausgestatteten Profile Alusic Line Evo stellen die ideale Schutzlösung dar.

Die Profilverbindungen müssen verklebt werden, um eine langlebige und zuverlässige Montage sicherzustellen.

The reproduction of this catalogue is prohibited without authorization. We reserve the right to make changes to our products to enhance their features.

25x25

Cod	Ix cm⁴	Iy cm⁴	wx cm³	wy cm³	mm²	Kg/m
013.025.001	1,5	1,5	1,2	1,2	173,1	0,47

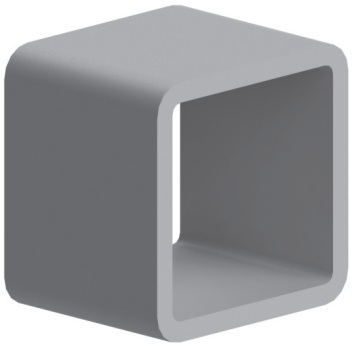

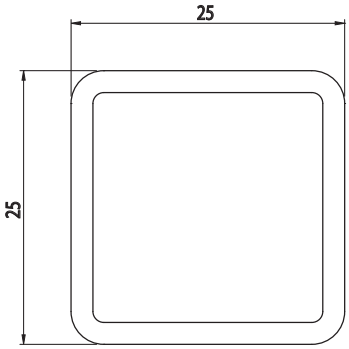

Anodised aluminium
Alluminio anodizzato
Aluminio anodizado
Aluminium anodisé
Eloxiertes Aluminium
L=6040 mm

Natural colour
Colore naturale
Color natural
Couleur naturelle
Natürliche Farbe

Cap - Tappo - Tapòn - Embout - Abdeck

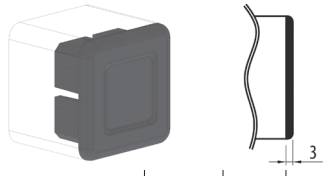

Cod	Mat	g	Col
013.100.001	PA6GF	3,5	■

25x25

Cod	Ix cm⁴	Iy cm⁴	wx cm³	wy cm³	mm²	Kg/m
013.025.002	2,23	4,34	1,14	2,95	266,12	0,72

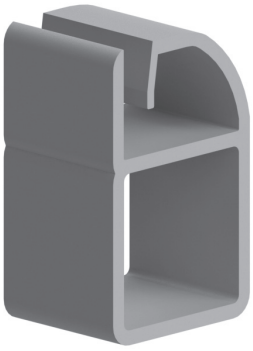

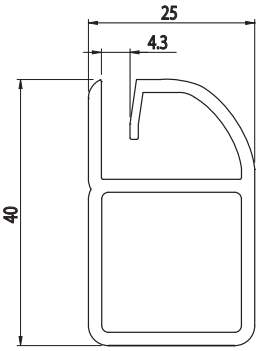

Anodised aluminium
Alluminio anodizzato
Aluminio anodizado
Aluminium anodisé
Eloxiertes Aluminium
L=6040 mm

Natural colour
Colore naturale
Color natural
Couleur naturelle
Natürliche Farbe

The reproduction of this catalogue is prohibited without authorization. We reserve the right to make changes to our products to enhance their features.

25x25

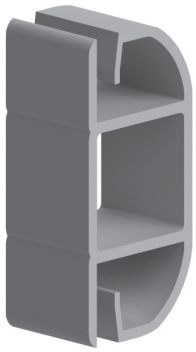

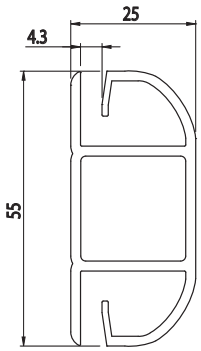

Cod	Ix cm⁴	Iy cm⁴	wx cm³	wy cm³	mm²	Kg/m
013.025.003	2,95	9,73	1,72	8,1	355,1	0,96

Anodised aluminium
Alluminio anodizzato
Aluminio anodizado
Aluminium anodisé
Eloxiertes Aluminium
L=6040 mm

Natural colour
Colore naturale
Color natural
Couleur naturelle
Natürliche Farbe

25x25

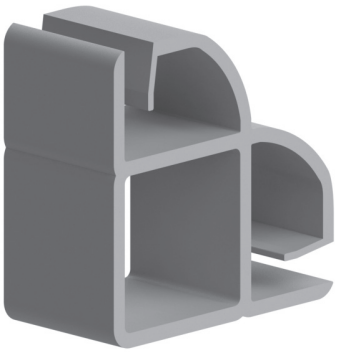

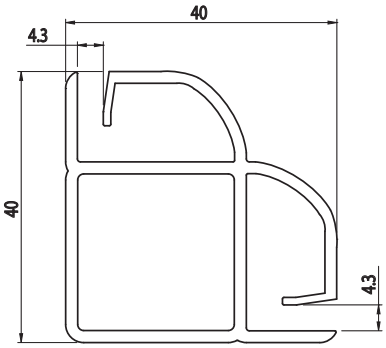

Cod	Ix cm⁴	Iy cm⁴	wx cm³	wy cm³	mm²	Kg/m
013.025.009	4,06	6,8	2,33	3,91	351,21	0,95

Anodised aluminium
Alluminio anodizzato
Aluminio anodizado
Aluminium anodisé
Eloxiertes Aluminium
L=6040 mm

Natural colour
Colore naturale
Color natural
Couleur naturelle
Natürliche Farbe

The reproduction of this catalogue is prohibited without authorization. We reserve the right to make changes to our products to enhance their features.

25x25

Cod	Ix cm⁴	Iy cm⁴	wx cm³	wy cm³	mm²	Kg/m
013.025.011	2,28	4,5	1,24	3,61	293,22	0,80

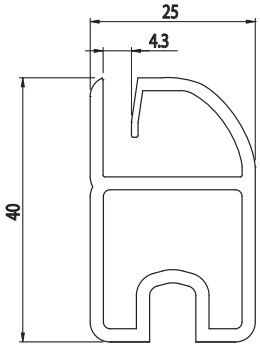

Anodised aluminium
Alluminio anodizzato
Aluminio anodizado
Aluminium anodisé
Eloxiertes Aluminium
L=6040 mm

Natural colour
Colore naturale
Color natural
Couleur naturelle
Natürliche Farbe

25x25

Cod	Ix cm⁴	Iy cm⁴	wx cm³	wy cm³	mm²	Kg/m
013.025.015	0,33	0,85	0,44	0,73	127,84	0,35

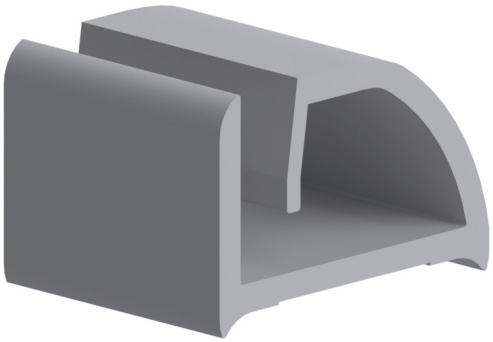

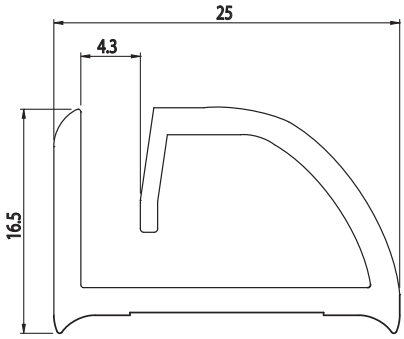

Anodised aluminium
Alluminio anodizzato
Aluminio anodizado
Aluminium anodisé
Eloxiertes Aluminium
L=6040 mm

Natural colour
Colore naturale
Color natural
Couleur naturelle
Natürliche Farbe

The reproduction of this catalogue is prohibited without authorization. We reserve the right to make changes to our products to enhance their features.

25x25

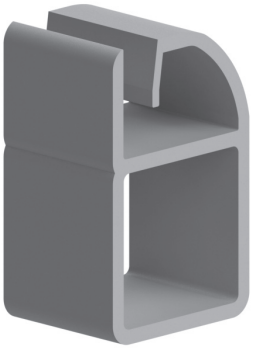

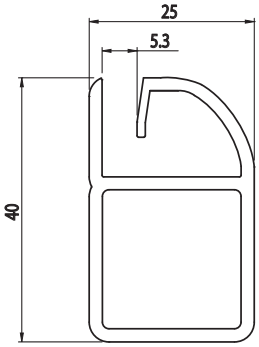

Cod	Ix cm⁴	Iy cm⁴	wx cm³	wy cm³	mm²	Kg/m
013.025.004	2,22	4,27	1,14	3,5	264,36	0,72

Anodised aluminium
Alluminio anodizzato
Aluminio anodizado
Aluminium anodisé
Eloxiertes Aluminium
L=6040 mm

Natural colour
Colore naturale
Color natural
Couleur naturelle
Natürliche Farbe

25x25

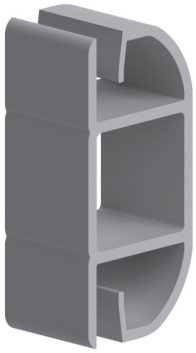

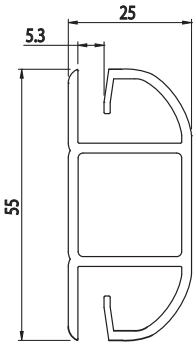

Cod	Ix cm⁴	Iy cm⁴	wx cm³	wy cm³	mm²	Kg/m
013.025.005	2,93	9,48	2,93	9,48	351,6	0,95

Anodised aluminium
Alluminio anodizzato
Aluminio anodizado
Aluminium anodisé
Eloxiertes Aluminium
L=6040 mm

Natural colour
Colore naturale
Color natural
Couleur naturelle
Natürliche Farbe

The reproduction of this catalogue is prohibited without authorization. We reserve the right to make changes to our products to enhance their features.

25x25

Cod	Ix cm⁴	Iy cm⁴	wx cm³	wy cm³	mm²	Kg/m
013.025.010	4,0	6,47	2,33	3,74	344,49	0,93

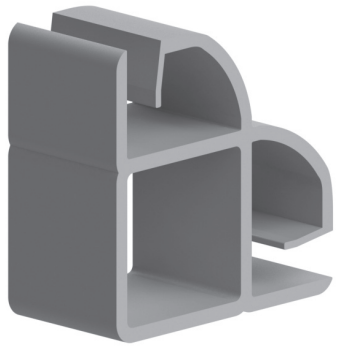

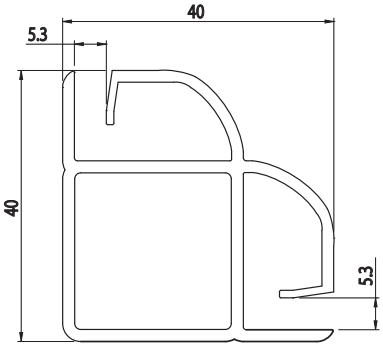

Anodised aluminium
Alluminio anodizzato
Aluminio anodizado
Aluminium anodisé
Eloxiertes Aluminium
L=6040 mm

Natural colour
Colore naturale
Color natural
Couleur naturelle
Natürliche Farbe

25x25

Cod	Ix cm⁴	Iy cm⁴	wx cm³	wy cm³	mm²	Kg/m
013.025.012	2,28	4,46	1,24	3,63	293,12	0,79

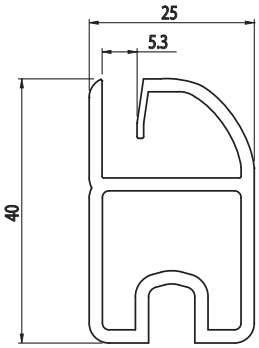

Anodised aluminium
Alluminio anodizzato
Aluminio anodizado
Aluminium anodisé
Eloxiertes Aluminium
L=6040 mm

Natural colour
Colore naturale
Color natural
Couleur naturelle
Natürliche Farbe

The reproduction of this catalogue is prohibited without authorization. We reserve the right to make changes to our products to enhance their features.

25x25

Cod	Ix cm⁴	Iy cm⁴	wx cm³	wy cm³	mm²	Kg/m
013.025.016	0,32	0,84	0,43	0,71	126,31	0,34

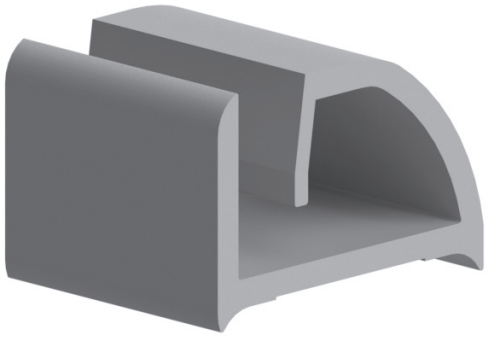

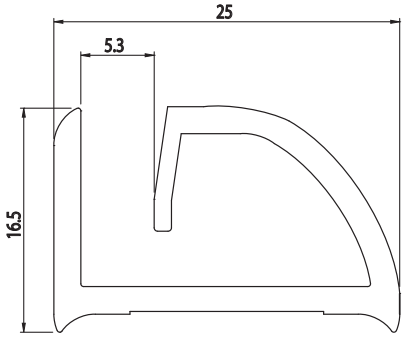

Anodised aluminium
Alluminio anodizzato
Aluminio anodizado
Aluminium anodisé
Eloxiertes Aluminium
L=6040 mm

Natural colour
Colore naturale
Color natural
Couleur naturelle
Natürliche Farbe

25x25

Cod	Ix cm⁴	Iy cm⁴	wx cm³	wy cm³	mm²	Kg/m
013.025.006	2,19	0,38	1,17	0,3	255,53	0,69

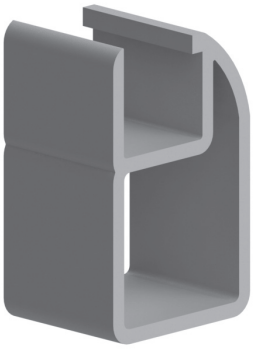

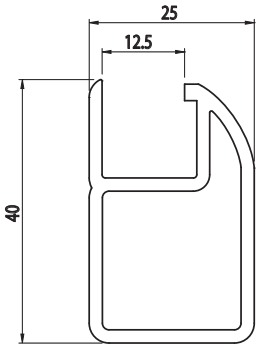

Anodised aluminium
Alluminio anodizzato
Aluminio anodizado
Aluminium anodisé
Eloxiertes Aluminium
L=6040 mm

Natural colour
Colore naturale
Color natural
Couleur naturelle
Natürliche Farbe

The reproduction of this catalogue is prohibited without authorization. We reserve the right to make changes to our products to enhance their features.

25x25

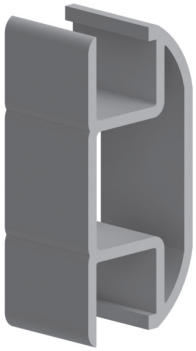

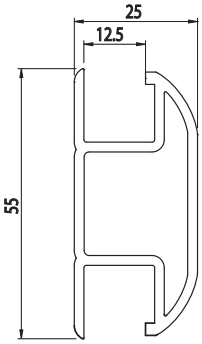

Cod	Ix cm⁴	Iy cm⁴	wx cm³	wy cm³	mm²	Kg/m
013.025.007	2,85	8,2	1,03	6,56	332,91	0,90

Anodised aluminium
Alluminio anodizzato
Aluminio anodizado
Aluminium anodisé
Eloxiertes Aluminium
L=6040 mm

Natural colour
Colore naturale
Color natural
Couleur naturelle
Natürliche Farbe

25x25

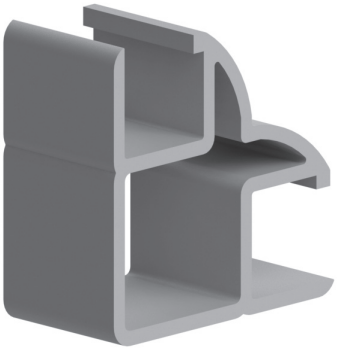

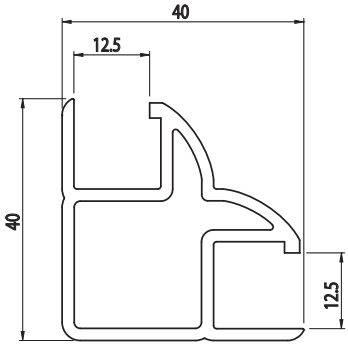

Cod	Ix cm⁴	Iy cm⁴	wx cm³	wy cm³	mm²	Kg/m
013.025.008	4,04	5,5	2,34	3,18	332,16	0,90

Anodised aluminium
Alluminio anodizzato
Aluminio anodizado
Aluminium anodisé
Eloxiertes Aluminium
L=6040 mm

Natural colour
Colore naturale
Color natural
Couleur naturelle
Natürliche Farbe

The reproduction of this catalogue is prohibited without authorization. We reserve the right to make changes to our products to enhance their features.

25x25

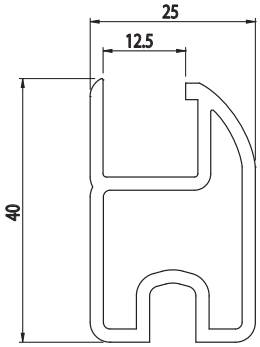

Cod	Ix cm⁴	Iy cm⁴	wx cm³	wy cm³	mm²	Kg/m
013.025.013	2,25	4,05	1,26	3,24	285,46	0,77

Anodised aluminium
Alluminio anodizzato
Aluminio anodizado
Aluminium anodisé
Eloxiertes Aluminium
L=6040 mm

Natural colour
Colore naturale
Color natural
Couleur naturelle
Natürliche Farbe

25x25

Cod	Ix cm⁴	Iy cm⁴	wx cm³	wy cm³	mm²	Kg/m
013.025.014	0,22	0,8	0,32	0,65	144,09	0,39

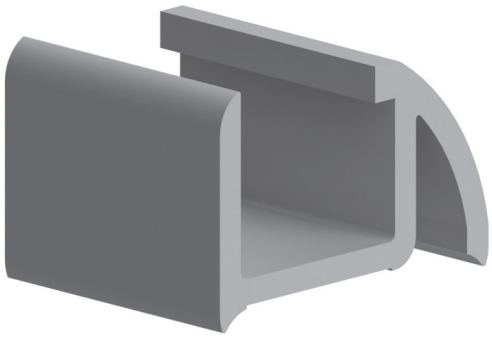

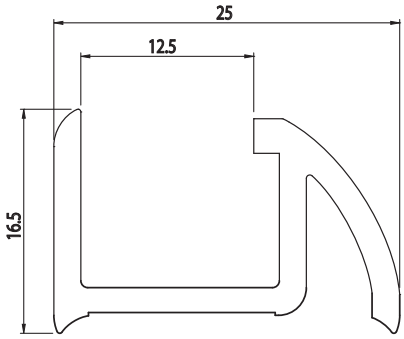

Anodised aluminium
Alluminio anodizzato
Aluminio anodizado
Aluminium anodisé
Eloxiertes Aluminium
L=6040 mm

Natural colour
Colore naturale
Color natural
Couleur naturelle
Natürliche Farbe

The reproduction of this catalogue is prohibited without authorization. We reserve the right to make changes to our products to enhance their features.

30x30

Cod	Ix cm⁴	Iy cm⁴	wx cm³	wy cm³	mm²	Kg/m
013.030.001	2,8	2,8	1,87	1,87	217	0,59

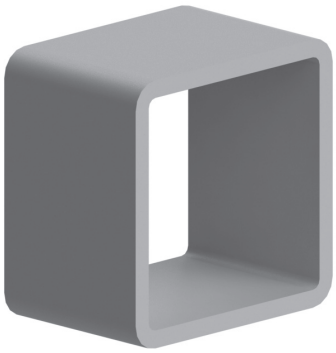

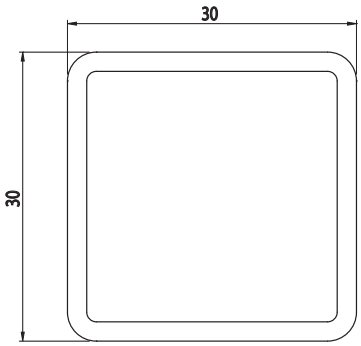

Anodised aluminium
Alluminio anodizzato
Aluminio anodizado
Aluminium anodisé
Eloxiertes Aluminium
L=6040 mm

Natural colour
Colore naturale
Color natural
Couleur naturelle
Natürliche Farbe

Cap - Tappo - Tapòn - Embout - Abdeck

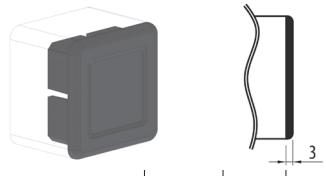

Cod	Mat	g	Col
013.100.002	PA6GF	8	■

30x30

Cod	Ix cm⁴	Iy cm⁴	wx cm³	wy cm³	mm²	Kg/m
013.030.002	2,6	4,62	1,73	4,74	315,22	0,85

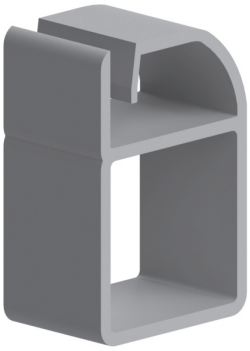

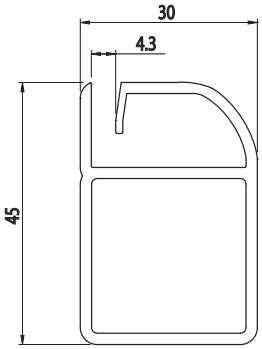

Anodised aluminium
Alluminio anodizzato
Aluminio anodizado
Aluminium anodisé
Eloxiertes Aluminium
L=6040 mm

Natural colour
Colore naturale
Color natural
Couleur naturelle
Natürliche Farbe

The reproduction of this catalogue is prohibited without authorization. We reserve the right to make changes to our products to enhance their features.

30x30

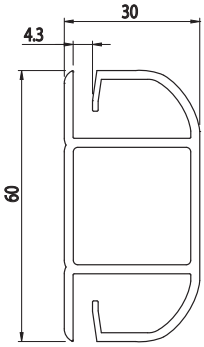

Cod	Ix cm⁴	Iy cm⁴	wx cm³	wy cm³	mm²	Kg/m
013.030.003	5,04	14,55	1,68	10,11	413,57	1,12

Anodised aluminium
Alluminio anodizzato
Aluminio anodizado
Aluminium anodisé
Eloxiertes Aluminium
L=6040 mm

Natural colour
Colore naturale
Color natural
Couleur naturelle
Natürliche Farbe

30x30

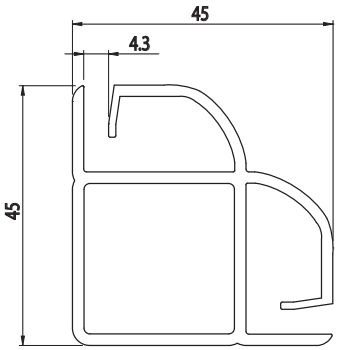

Cod	Ix cm⁴	Iy cm⁴	wx cm³	wy cm³	mm²	Kg/m
013.030.009	6,68	10,49	3,3	5,19	411,44	1,12

Anodised aluminium
Alluminio anodizzato
Aluminio anodizado
Aluminium anodisé
Eloxiertes Aluminium
L=6040 mm

Natural colour
Colore naturale
Color natural
Couleur naturelle
Natürliche Farbe

The reproduction of this catalogue is prohibited without authorization. We reserve the right to make changes to our products to enhance their features.

30x30

Cod	Ix cm⁴	Iy cm⁴	wx cm³	wy cm³	mm²	Kg/m
013.030.015	0,42	1,4	0,55	1	147	0,40

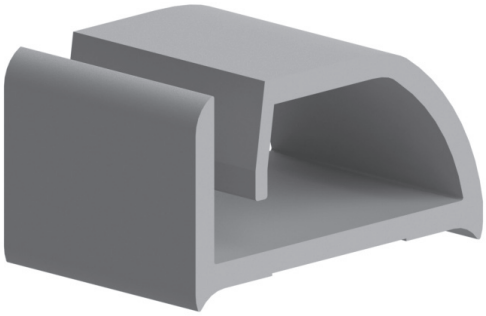

Anodised aluminium
Alluminio anodizzato
Aluminio anodizado
Aluminium anodisé
Eloxiertes Aluminium
L=6040 mm

Natural colour
Colore naturale
Color natural
Couleur naturelle
Natürliche Farbe

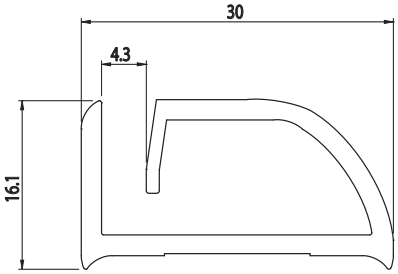

30x30

Cod	Ix cm⁴	Iy cm⁴	wx cm³	wy cm³	mm²	Kg/m
013.030.004	6,8	3,9	3	2,54	313	0,85

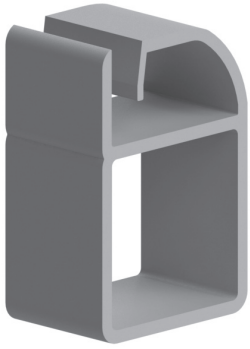

Anodised aluminium
Alluminio anodizzato
Aluminio anodizado
Aluminium anodisé
Eloxiertes Aluminium
L=6040 mm

Natural colour
Colore naturale
Color natural
Couleur naturelle
Natürliche Farbe

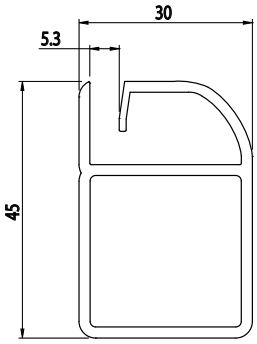

The reproduction of this catalogue is prohibited without authorization. We reserve the right to make changes to our products to enhance their features.

30x30

Cod	Ix cm⁴	Iy cm⁴	wx cm³	wy cm³	mm²	Kg/m
013.030.005	14,2	5	4,73	3,22	410	1,11

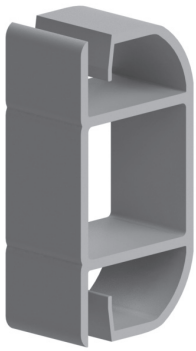

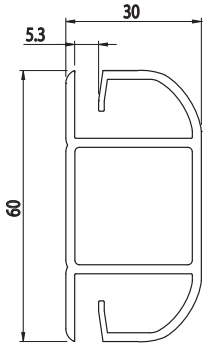

Anodised aluminium
Alluminio anodizzato
Aluminio anodizado
Aluminium anodisé
Eloxiertes Aluminium
L=6040 mm

Natural colour
Colore naturale
Color natural
Couleur naturelle
Natürliche Farbe

30x30

Cod	Ix cm⁴	Iy cm⁴	wx cm³	wy cm³	mm²	Kg/m
013.030.010	6,66	10,18	3,26	4,99	407,54	1,11

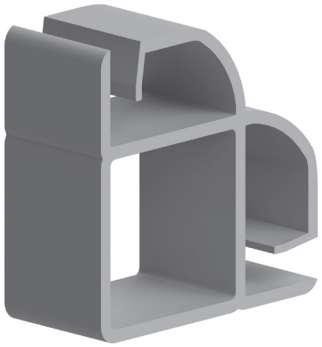

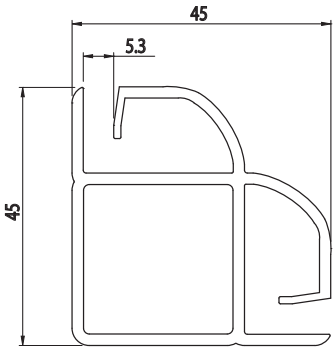

Anodised aluminium
Alluminio anodizzato
Aluminio anodizado
Aluminium anodisé
Eloxiertes Aluminium
L=6040 mm

Natural colour
Colore naturale
Color natural
Couleur naturelle
Natürliche Farbe

The reproduction of this catalogue is prohibited without authorization. We reserve the right to make changes to our products to enhance their features.

30x30

Cod	Ix cm⁴	Iy cm⁴	wx cm³	wy cm³	mm²	Kg/m
013.030.016	0,41	1,38	0,54	0,97	145,3	0,39

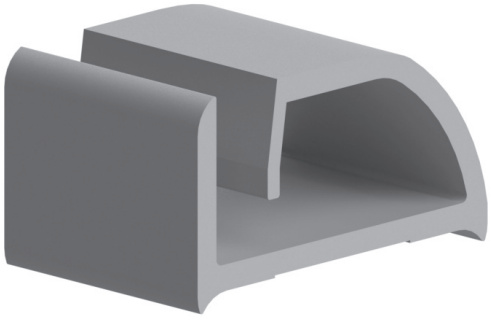

Anodised aluminium
Alluminio anodizzato
Aluminio anodizado
Aluminium anodisé
Eloxiertes Aluminium
L=6040 mm

Natural colour
Colore naturale
Color natural
Couleur naturelle
Natürliche Farbe

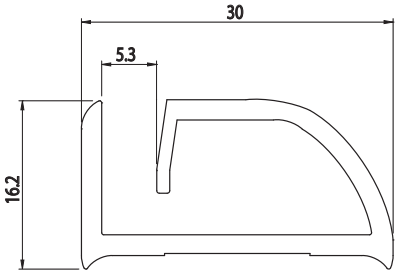

30x30

Cod	Ix cm⁴	Iy cm⁴	wx cm³	wy cm³	mm²	Kg/m
013.030.006	3,7	6,44	1,7	4,41	298,33	0,81

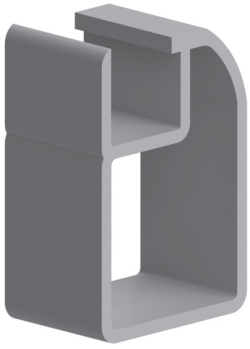

Anodised aluminium
Alluminio anodizzato
Aluminio anodizado
Aluminium anodisé
Eloxiertes Aluminium
L=6040 mm

Natural colour
Colore naturale
Color natural
Couleur naturelle
Natürliche Farbe

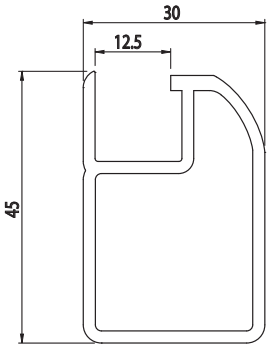

The reproduction of this catalogue is prohibited without authorization. We reserve the right to make changes to our products to enhance their features.

30x30

Cod	Ix cm⁴	Iy cm⁴	wx cm³	wy cm³	mm²	Kg/m
013.030.008	6,58	8,9	3,29	4,45	378,72	1,03

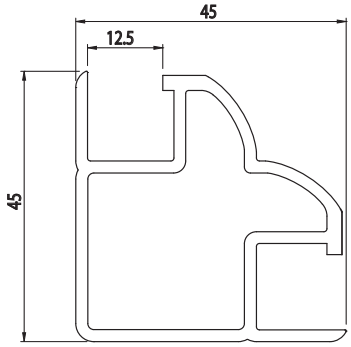

Anodised aluminium
Alluminio anodizzato
Aluminio anodizado
Aluminium anodisé
Eloxiertes Aluminium
L=6040 mm

Natural colour
Colore naturale
Color natural
Couleur naturelle
Natürliche Farbe

30x30

Cod	Ix cm⁴	Iy cm⁴	wx cm³	wy cm³	mm²	Kg/m
013.030.14	0,27	1,18	0,36	0,83	126,88	0,34

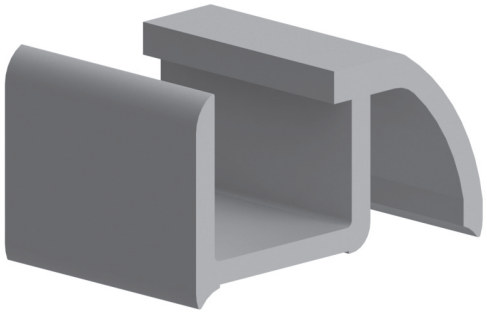

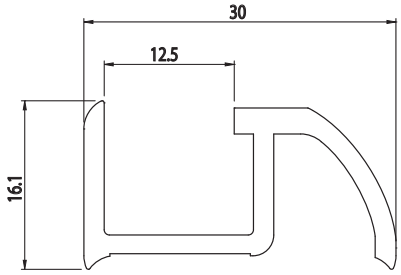

Anodised aluminium
Alluminio anodizzato
Aluminio anodizado
Aluminium anodisé
Eloxiertes Aluminium
L=6040 mm

Natural colour
Colore naturale
Color natural
Couleur naturelle
Natürliche Farbe

The reproduction of this catalogue is prohibited without authorization. We reserve the right to make changes to our products to enhance their features.

30x30

Cod	Ix cm⁴	Iy cm⁴	wx cm³	wy cm³	mm²	Kg/m
013.030.007	2,9	8,85	1,27	7,9	305,73	0,83

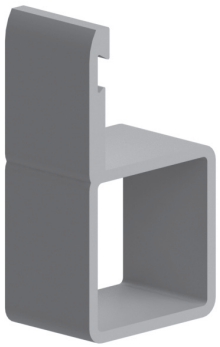

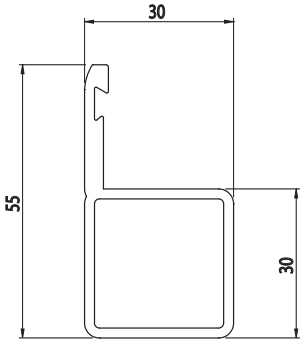

Anodised aluminium
Alluminio anodizzato
Aluminio anodizado
Aluminium anodisé
Eloxiertes Aluminium
L=6040 mm

Natural colour
Colore naturale
Color natural
Couleur naturelle
Natürliche Farbe

30x30

Cod	Ix cm⁴	Iy cm⁴	wx cm³	wy cm³	mm²	Kg/m
013.030.017	3,8	0,35	1,58	1,4	192,5	0,49

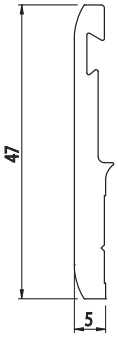

Anodised aluminium
Alluminio anodizzato
Aluminio anodizado
Aluminium anodisé
Eloxiertes Aluminium
L=6040 mm

Natural colour
Colore naturale
Color natural
Couleur naturelle
Natürliche Farbe

The reproduction of this catalogue is prohibited without authorization. We reserve the right to make changes to our products to enhance their features.

30x30

Cod	Ix cm⁴	Iy cm⁴	wx cm³	wy cm³	mm²	Kg/m
013.030.011	4,41	2,81	2,07	1,87	266	0,72

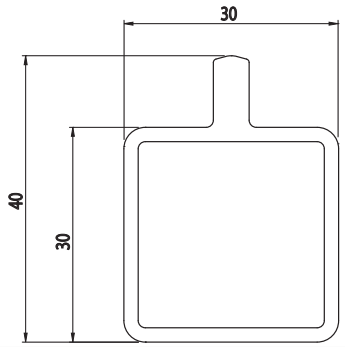

Anodised aluminium
Alluminio anodizzato
Aluminio anodizado
Aluminium anodisé
Eloxiertes Aluminium
L=6040 mm

Natural colour
Colore naturale
Color natural
Couleur naturelle
Natürliche Farbe

30x60

Cod	Ix cm⁴	Iy cm⁴	wx cm³	wy cm³	mm²	Kg/m
013.030.012	17,59	8,80	5,86	4,18	482	1,31

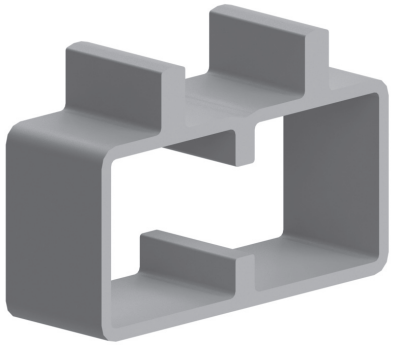

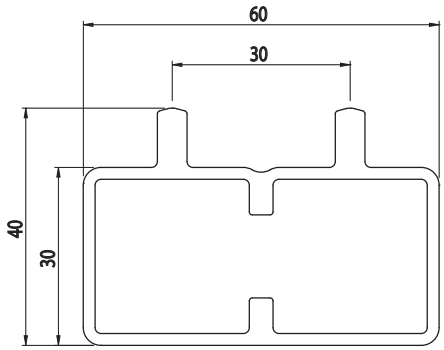

Anodised aluminium
Alluminio anodizzato
Aluminio anodizado
Aluminium anodisé
Eloxiertes Aluminium
L=6040 mm

Natural colour
Colore naturale
Color natural
Couleur naturelle
Natürliche Farbe

The reproduction of this catalogue is prohibited without authorization. We reserve the right to make changes to our products to enhance their features.

30x90

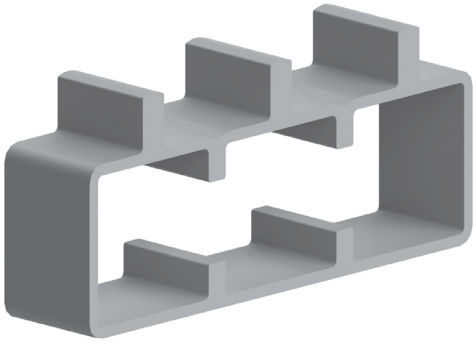

Cod	Ix cm⁴	Iy cm⁴	wx cm³	wy cm³	mm²	Kg/m
013.030.018	13,17	54,05	6,93	12,01	697,11	1,89

Anodised aluminium
Alluminio anodizzato
Aluminio anodizado
Aluminium anodisé
Eloxiertes Aluminium
L=6040 mm

Natural colour
Colore naturale
Color natural
Couleur naturelle
Natürliche Farbe

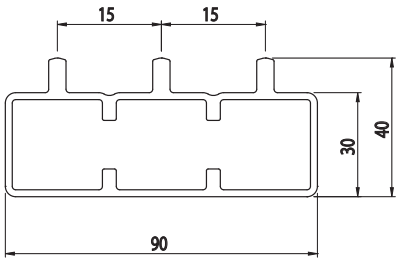

30x60

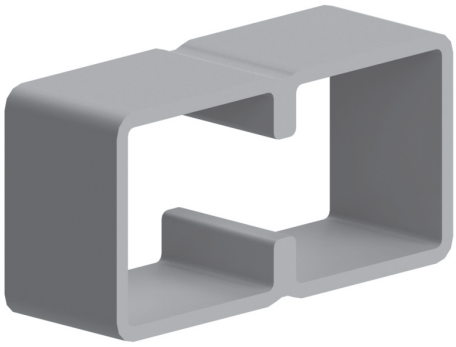

Cod	Ix cm⁴	Iy cm⁴	wx cm³	wy cm³	mm²	Kg/m
013.030.013	5,56	15,35	3,7	5,11	383,82	1,04

Anodised aluminium
Alluminio anodizzato
Aluminio anodizado
Aluminium anodisé
Eloxiertes Aluminium
L=6040 mm

Natural colour
Colore naturale
Color natural
Couleur naturelle
Natürliche Farbe

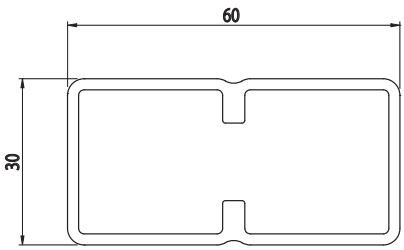

The reproduction of this catalogue is prohibited without authorization. We reserve the right to make changes to our products to enhance their features.

30x90

Cod	Ix cm⁴	Iy cm⁴	wx cm³	wy cm³	mm²	Kg/m
013.030.019	8,33	45,21	5,55	10,04	551,76	1,49

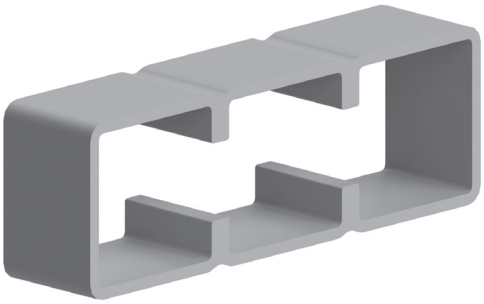

Anodised aluminium
Alluminio anodizzato
Aluminio anodizado
Aluminium anodisé
Eloxiertes Aluminium
L=6040 mm

Natural colour
Colore naturale
Color natural
Couleur naturelle
Natürliche Farbe

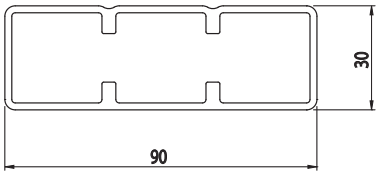

70x70

Cod	Ix cm⁴	Iy cm⁴	wx cm³	wy cm³	mm²	Kg/m
013.030.020	8,43	33,27	2,41	9,5	439,04	1,19

Anodised aluminium
Alluminio anodizzato
Aluminio anodizado
Aluminium anodisé
Eloxiertes Aluminium
L=6040 mm

Natural colour
Colore naturale
Color natural
Couleur naturelle
Natürliche Farbe

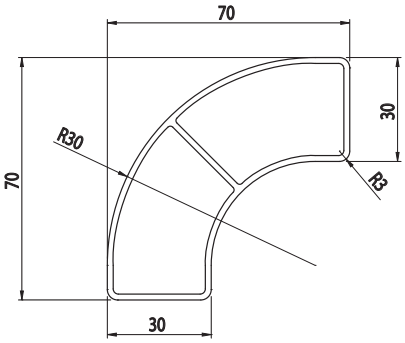

Cap - Tappo - Tapòn - Embout - Abdeck

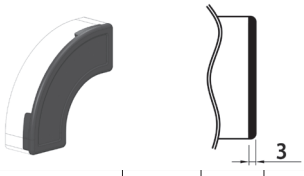

Cod	Mat	g	Col
013.100.043	PA6GF	10,3	■

The reproduction of this catalogue is prohibited without authorization. We reserve the right to make changes to our products to enhance their features.

30X30 PROFILE FOR SLIDING DOOR

PROFILO 30X30 PER SCORREVOLE
PERFIL 30X30 PARA PUERTA CORREDIZA
PROFILÉ 30X30 POUR PORTE COULISSANTE
PROFIL 30X30 FÜR SCHIEBETÜR

Cod	Ix cm⁴	Iy cm⁴	wx cm³	wy cm³	mm²	Kg/m
013.030.021	4,43	6,03	2	4,02	344,79	0,93

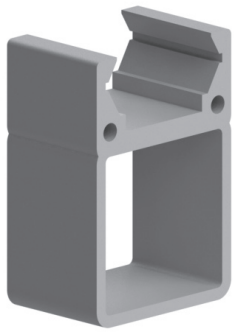

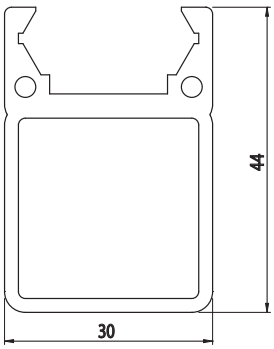

Anodised aluminium
Alluminio anodizzato
Aluminio anodizado
Aluminium anodisé
Eloxiertes Aluminium
L=6040 mm

Natural colour
Colore naturale
Color natural
Couleur naturelle
Natürliche Farbe

Cap - Tappo - Tapòn - Embout - Abdeck

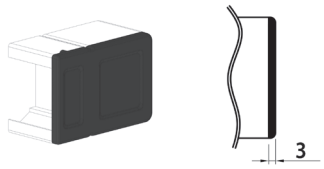

Cod	Mat	g	Col
013.030.051	PA6GF	1,4	■

FRAME FOR SLIDING DOOR

CORNICE PER SCORREVOLE
MARCO PARA PUERTA CORREDIZA
CADRE POUR PORTE COULISSANTE
RAHMEN FÜR SCHIEBETÜR

Cod	Ix cm⁴	Iy cm⁴	wx cm³	wy cm³	mm²	Kg/m
013.030.022	0,28	1,9	0,56	1,26	166,62	0,45

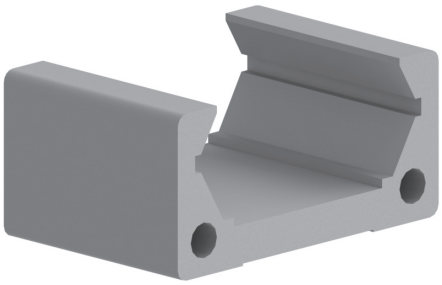

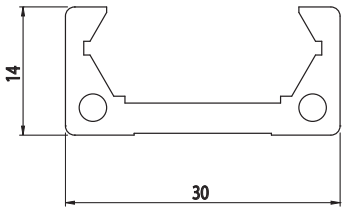

Anodised aluminium
Alluminio anodizzato
Aluminio anodizado
Aluminium anodisé
Eloxiertes Aluminium
L=6040 mm

Natural colour
Colore naturale
Color natural
Couleur naturelle
Natürliche Farbe

Cap - Tappo - Tapòn - Embout - Abdeck

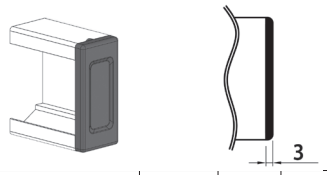

Cod	Mat	g	Col
013.100.042	PA6GF	1,4	■

The reproduction of this catalogue is prohibited without authorization. We reserve the right to make changes to our products to enhance their features.

30X30 CABLE CHANNEL
CANALINA PORTACAVI 30X30
NOME SPAGNOLO
NOME FRANCESE
NOME TEDESCO

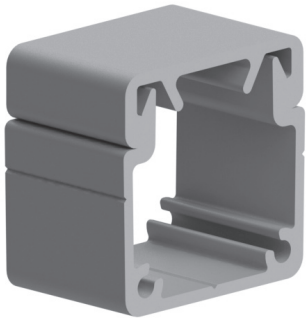

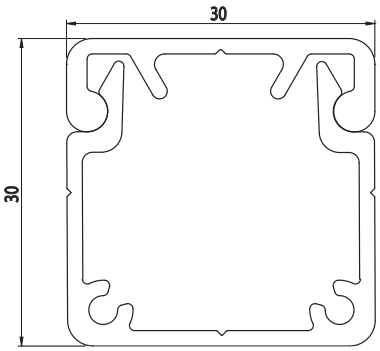

Cod	Note	Kg/m
084.101.092	Cable channel - Canalina - Canaleta para cables - Caniveau à câbles - Abdeckung Kabelkanal	0,45
084.101.093	Cable channel cover - Coperchio canalina - Tapa canaleta para cables - Couvercle caniveau à câbles - Abdeckung Kabelkanal	0,28

Anodised aluminium
Alluminio anodizzato
Aluminio anodizado
Aluminium anodisé
Eloxiertes Aluminium
L=6040 mm

Natural colour
Colore naturale
Color natural
Couleur naturelle
Natürliche Farbe

Cap - Tappo - Tapòn - Embout - Abdeck

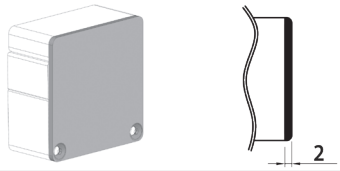

Cod	Mat	g	Col
084.201.096	ALL	4,7	■

The reproduction of this catalogue is prohibited without authorization. We reserve the right to make changes to our products to enhance their features.

EN

The frames of the FPZ Evo line must be joined to the basic profiles with double-sided tape (code 013.818.004)
They are extremely simple to apply. As soon as they are joined together, the double-sided adhesive still allows a short-term handling for perfect coupling.

Application sequence:
1. clean / degrease the two surfaces
2. apply the double-sided tape on the hidden side of the frame
3. remove the protection strip
4. join the two profiles
5. adjust the coupling if necessary and press the two profiles lightly

IT

Le cornici della linea FPZ Evo vanno unite ai profili base con del nastro biadesivo (cod. 013.818.004)
Sono semplici da applicare. Appena uniti, il biadesivo consente nel breve periodo di effettuare ancora alcuni aggiustamenti per un accoppiamento perfetto.

Sequenza per l'applicazione:
1. pulire / sgrassare le due superfici
2. applicare il nastro biadesivo sul lato nascosto della cornice
3. rimuovere la striscia di protezione
4. unire i due profili
5. aggiustare se necessario l'accoppiamento e premere leggermente i due profili

ES

Los marcos de la línea FPZ Evo se unen a los perfiles básicos con cinta de doble cara (cod. 013.818.004)
Son simples de aplicar. Tan pronto como se unen, el adhesivo de doble cara permite un acoplamiento perfecto.

Secuencia para la aplicación:
1. limpiar / desengrasar las dos superficies
2. aplicar la cinta de doble cara en el lado oculto del marco
3. retirar la tira de protección
4. unir los dos perfiles
5. ajustar el acoplamiento si es necesario y presionar ligeramente los dos perfiles

FR

Les cadres de la ligne FPZ Evo sont joints aux profils de base avec du ruban adhésif double face (code 013.818.004)
Ils sont simples à appliquer. Dès qu'ils sont assemblés, l'adhésif double face permet une manipulation à court terme pour un couplage parfait.

Séquence d'application:
1. nettoyer / dégraisser les deux surfaces
2. appliquer le ruban adhésif double face sur le côté caché du cadre
3. enlever la bande de protection
4. joindre les deux profilés
5. régler l'accouplement si nécessaire et appuyez légèrement sur les deux profils

DE

Die Rahmen der FPZ Evo-Linie sollen mit doppelseitigem Klebeband (Art.-Nr. 013.818.004) zu den Basisprofilen verbunden werden.
Sie sind einfach anzuwenden. Sobald sie zusammengesetzt sind, ermöglicht das doppelseitige Klebeband eine kurzfristige Handhabung für eine perfekte Kopplung.

Anwendung:
1. Beide Oberflächen reinigen / entfetten
2. Das doppelseitige Klebeband am Profil anbringen
3. Den Schutzstreifen abziehen
4. Beide Profile verbinden
5. Die Kopplung regulieren und leicht auf die beiden Profile drücken

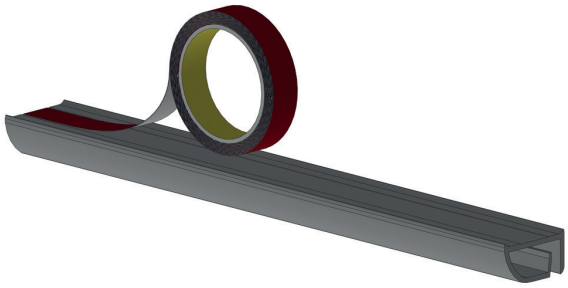

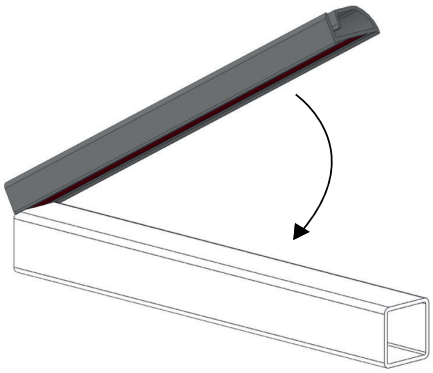

The reproduction of this catalogue is prohibited without authorization. We reserve the right to make changes to our products to enhance their features.

The reproduction of this catalogue is prohibited without authorization. We reserve the right to make changes to our products to enhance their features.

Alusic

ACCESSORIES

ACCESSORI
ACCESORIOS
ACCESSOIRES
ZUBEHÖR

EN **In this section you will find end caps, fasteners, joints, hinges, handles and components for sliders and guards.**

IT In questa sezione possiamo trovare tappi di chiusura, viteria, giunzioni, cerniere, maniglie ed elementi per scorrevoli e per la realizzazione di protezioni.

ES En esta sección encontrará tapones de cierre, tornillería, uniónes, bisagras, asideros y elementos para correderas y para la realización de protecciones y resguardos.

FR La présente section contient des bouchons de fermeture, de la visserie, des joints, des charnières, des poignées et des éléments pour coulissants et pour la réalisation de protections.

DE In diesem Abschnitt finden wir Verschlusskappen, Schrauben, Verbinder, Scharniere, Griffe und Elemente für Schiebekonstruktionen und für die Schaffung von Schutzvorrichtungen.

The reproduction of this catalogue is prohibited without authorization. We reserve the right to make changes to our products to enhance their features.

SELF-TAPPING SCREW
VITE AUTOFILETTANTE
TORNILLO DE ROSCA CORTANTE
VIS TARAUDEUSE
GEWINDESCHNEIDENDE SCHRAUBE

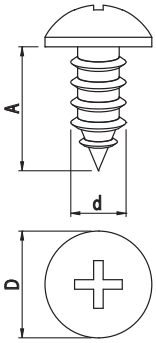

Cod	Note	d	A	D	B	s	g
2965UNI6954	2,9x6,5	2,6	6,5	5,6	-	-	0,5
3919UNI6954	3,9x19	3,9	19	7,5	-	-	1,6
3932UNI7504M	3,9x32	3,9	32	7,5	-	-	2,4
4216UNI6954	4,2x16	4,2	16	8,2	-	-	2,4

Zinc plated steel
Acciaio zincato
Acero galvanizado
Acier zingué
Verzinkter Stahl

COUNTERSUNK TAPPING SCREW
VITE TESTA SVASATA AUTOFILETTANTE
TORNILLO DE ROSCA CORTANTE
VIS TARAUDEUSE
SENK-BLECHSCHRAUBE

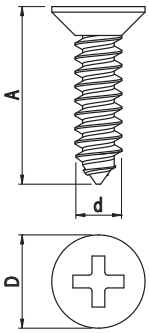

Cod	Note	d	A	D	B	s	g
4216ISO7050	4,2x16	4,2	16	8,1	-	-	3
4222ISO7050	4,2x22	4,2	22	8,1	-	-	3,5
4822ISO7050	4,8x22	4,8	22	9,5	-	-	4

Zinc plated steel
Acciaio zincato
Acero galvanizado
Acier zingué
Verzinkter Stahl

The reproduction of this catalogue is prohibited without authorization. We reserve the right to make changes to our products to enhance their features.

BUTTON HEAD SCREWS
VITE BOMBATE
TORNILLOS DE CABEZA ABOMBADA
VIS À TÊTE BOMBÉE
LINSENSCHRAUBEN

Cod	Note	d	A	D	B	s	g
084.301.040	M6x16	M6	16	10	-	-	5

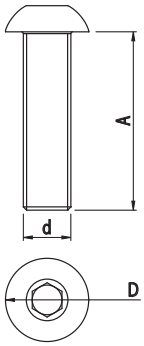

Zinc plated steel
Acciaio zincato
Acero galvanizado
Acier zingué
Verzinkter Stahl

SQUARE NUT
DADO QUADRO
TUERCA CUADRADA
ÉCROU CARRÉ
VIERKANTMUTTER

Cod	Note	g
084.302.003	M6	3

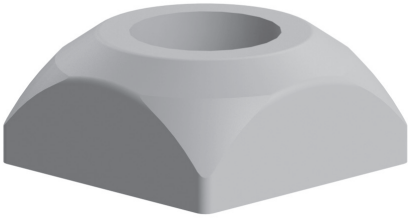

Zinc plated steel
Acciaio zincato
Acero galvanizado
Acier zingué
Verzinkter Stahl

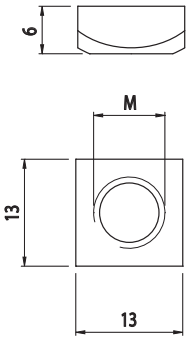

The reproduction of this catalogue is prohibited without authorization. We reserve the right to make changes to our products to enhance their features.

SQUARE NUT WITH SPRING
DADO QUADRO CON MOLLA
TUERCA CUADRADA CON RESORTE
ÉCROU CARRÉ AVEC RESSORT
VIERKANTMUTTER MIT FEDER

Cod	Note	g
084.302.008	M6	5

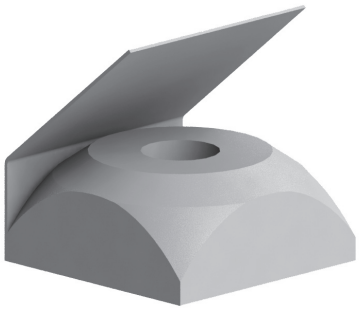

Zinc plated steel
Acciaio zincato
Acero galvanizado
Acier zingué
Verzinkter Stahl

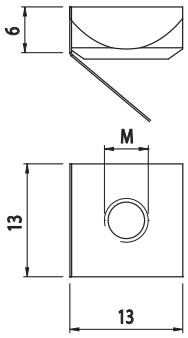

CAPTIVE THREADED PIN
PERNO FILETTATO IMPERDIBILE
PERNO ROSCADO IMPERDIBLE
TIGE FILETÉE IMPERDABLE
UNVERLIERBARER GEWINDESTIFT

Cod	Note	g
013.100.015	For 25x25 - Per 25x25 - Para 25x25 - Pour 25x25 - Für 25x25	15

Zinc plated steel
Acciaio zincato
Acero galvanizado
Acier zingué
Verzinkter Stahl

Drilling Ø11
Foro Ø11
Agujero Ø11
Perçage Ø11
Bohrung Ø11

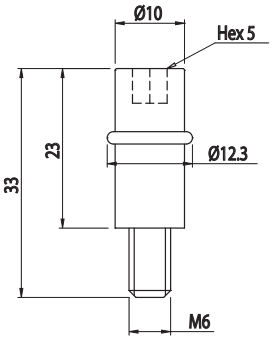

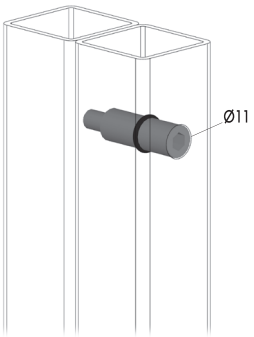

The reproduction of this catalogue is prohibited without authorization. We reserve the right to make changes to our products to enhance their features.

CAPTIVE THREADED PIN
PERNO FILETTATO IMPERDIBILE
PERNO ROSCADO IMPERDIBLE
TIGE FILETÉE IMPERDABLE
UNVERLIERBARER GEWINDESTIFT

Cod	Note	g
013.100.016	For 30x30 - Per 30x30 - Para 30x30 - Pour 30x30 - Für 30x30	18
013.100.072	Thread 15mm - Filetto 15 mm - Rosca 15mm Filetage 15mm - Gewinde 15mm	19

Zinc plated steel
Acciaio zincato
Acero galvanizado
Acier zingué
Verzinkter Stahl

Drilling Ø11
Foro Ø11
Agujero Ø11
Perçage Ø11
Bohrung Ø11

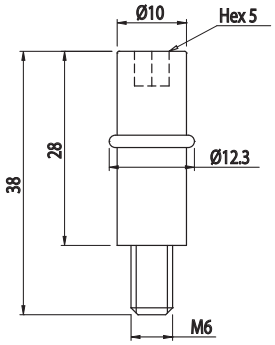

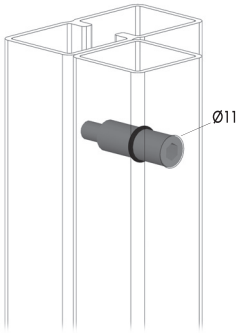

CAPTIVE THREADED PIN
PERNO FILETTATO IMPERDIBILE
PERNO ROSCADO IMPERDIBLE
TIGE FILETÉE IMPERDABLE
UNVERLIERBARER GEWINDESTIFT

Cod	Note	g
013.100.017	For 25 with frame - Per 25 con cornice - Para 25 con marco - Pour 25 avec cadre - Für 25 mit Rahmen	24

Zinc plated steel
Acciaio zincato
Acero galvanizado
Acier zingué
Verzinkter Stahl

Drilling Ø11
Foro Ø11
Agujero Ø11
Perçage Ø11
Bohrung Ø11

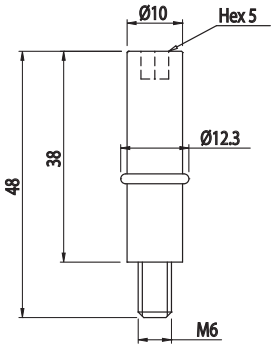

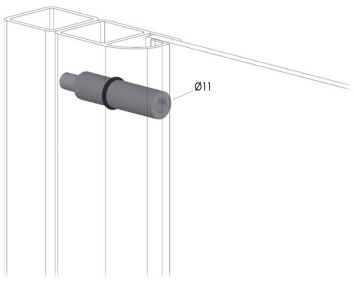

The reproduction of this catalogue is prohibited without authorization. We reserve the right to make changes to our products to enhance their features.

CAPTIVE THREADED PIN
PERNO FILETTATO IMPERDIBILE
PERNO ROSCADO IMPERDIBLE
TIGE FILETÉE IMPERDABLE
UNVERLIERBARER GEWINDESTIFT

Cod	Note	g
013.100.018	For 30 with frame - Per 30 con cornice - Para 30 con marco - Pour 30 aver cadre - Für 30 mit Rahmen	27
013.100.073	Thread 15mm - Filetto 15 mm - Rosca 15mm Filetage 15mm - Gewinde 15mm	28,2

Zinc plated steel
Acciaio zincato
Acero galvanizado
Acier zingué
Verzinkter Stahl

Drilling Ø11
Foro Ø11
Agujero Ø11
Perçage Ø11
Bohrung Ø11

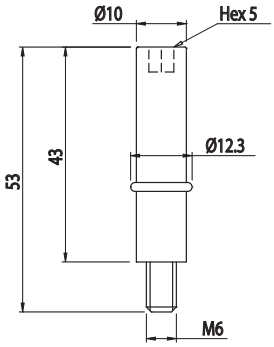

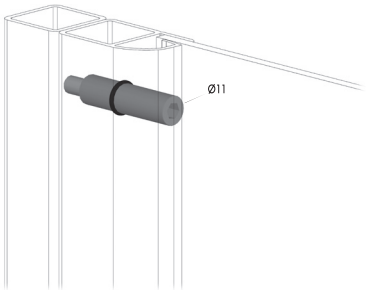

CAPTIVE THREADED PIN
PERNO FILETTATO IMPERDIBILE
PERNO ROSCADO IMPERDIBLE
TIGE FILETÉE IMPERDABLE
UNVERLIERBARER GEWINDESTIFT

Cod	Note	g
013.100.019	For 30x60 - Per 30x60 - Para 30x60 - Pour 30x60 - Für 30x60	36,4
013.100.074	Thread 15mm - Filetto 15 mm - Rosca 15mm Filetage 15mm - Gewinde 15mm	37,5

Zinc plated steel
Acciaio zincato
Acero galvanizado
Acier zingué
Verzinkter Stahl

Drilling Ø11
Foro Ø11
Agujero Ø11
Perçage Ø11
Bohrung Ø11

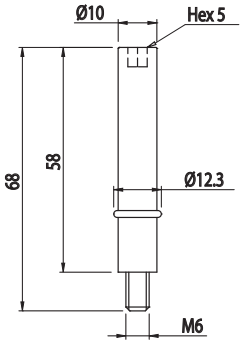

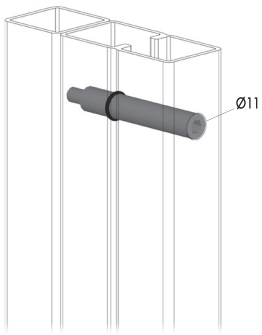

The reproduction of this catalogue is prohibited without authorization. We reserve the right to make changes to our products to enhance their features.

THREADED BUSHING
BOCCOLA FILETTATA
CASQUILLO ROSCADO
DOUILLE FILETÉE
GEWINDEBUCHSE

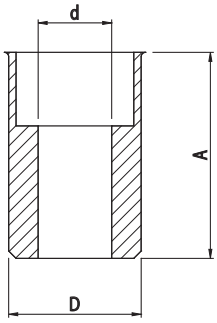

Cod	Note	d	A	D	B	s	g
084.312.005	-	M6	14	9	-	-	2
084.312.007	-	M5	11,50	7	-	-	2
084.312.015	-	M4	11,2	6	-	-	1,5

Zinc plated steel
Acciaio zincato
Acero galvanizado
Acier zingué
Verzinkter Stahl

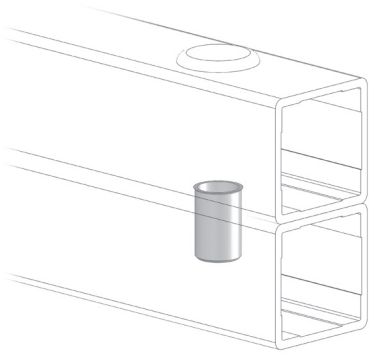

WASHER FOR COUNTERSUNK SCREWS
RONDELLA PER VITI SVASATE
ARANDELA PARA TORNILLOS DE CABEZA CÓNICA
RONDELLE POUR VIS TÊTE FRAISÉE
STOPPERRING FÜR SENKKOPFSCHRAUBEN

STAINLESS STEEL

Cod	Note	g
084.303.009	For countersunk screws - Per viti svasate - Para tornillos de cabeza cónica - Pour vis tête fraisée - Für Senkkopfschrauben	3,62

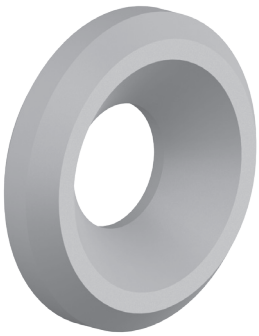

Stainless steel
Acciaio inox
Acero inoxidable
Acier inox
Rostfreier Stahl

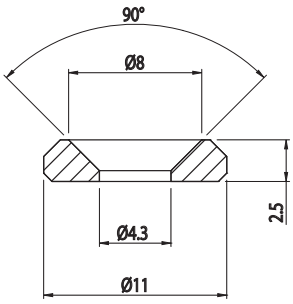

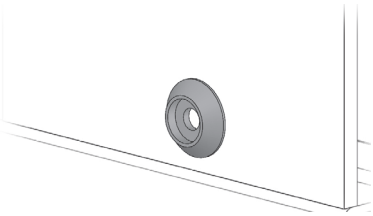

The reproduction of this catalogue is prohibited without authorization. We reserve the right to make changes to our products to enhance their features.

WASHER FOR COUNTERSUNK SCREWS

RONDELLA PER VITI SVASATE
ARANDELA PARA TORNILLOS DE CABEZA CÓNICA
RONDELLE POUR VIS TÊTE FRAISÉE
STOPPERRING FÜR SENKKOPFSCHRAUBEN

STAINLESS STEEL

Cod	Note	g
084.303.010	For countersunk screws - Per viti svasate - Para tornillos de cabeza cónica - Pour vis tête fraisée - Für Senkkopfschrauben	4,89

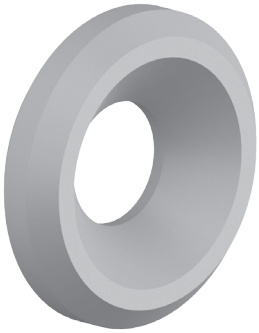

Stainless steel
Acciaio inox
Acero inoxidable
Acier inox
Rostfreier Stahl

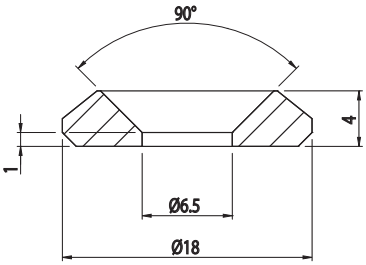

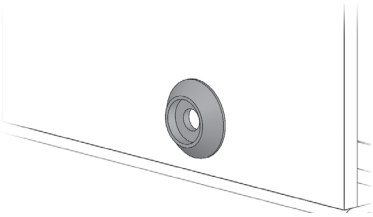

GLASS RETENTION WASHER

RONDELLA FERMAVETRO
ARANDELA SUJETA-CRISTAL
RONDELLE DE FIXATION VERRE
SCHEIBENSTOPPERRING

Cod	Note	g
084.509.002	For 013.100.012 - Per 013.100.012 - Para 013.100.012 - Pour 013.100.012 - Für 013.100.012	1

Grey polyamide
Poliammide grigio
Poliamida color gris
Polyamide gris
Polyamid grau

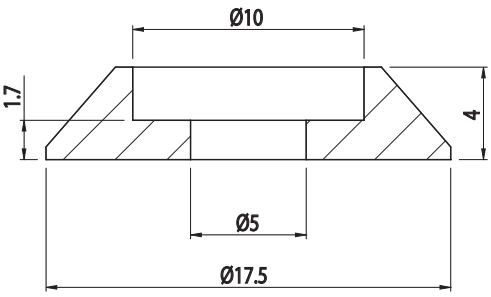

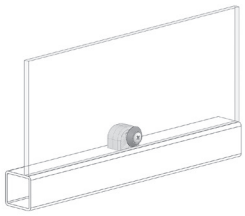

The reproduction of this catalogue is prohibited without authorization. We reserve the right to make changes to our products to enhance their features.

GLASS RETENTION WASHER
RONDELLA FERMAVETRO
ARANDELA SUJETA-CRISTAL
RONDELLE DE FIXATION VERRE
SCHEIBENSTOPPERRING

Cod	Note	g
084.509.004	For 013.100.012 - Per 013.100.012 - Para 013.100.012 - Pour 013.100.012 - Für 013.100.012	0,7

TPC-ET

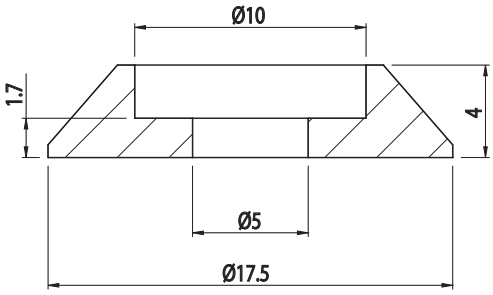

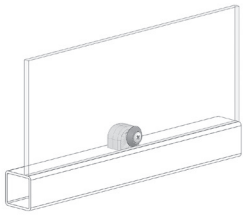

GLASS RETENTION WASHER
RONDELLA FERMAVETRO
ARANDELA SUJETA-CRISTAL
RONDELLE DE FIXATION VERRE
SCHEIBENSTOPPERRING

Cod	Note	g
013.100.049	For caps 013.100.046 / 047 / 048 - Per tappo 013.100.046 / 047 / 048 - Para tapones 013.100.046 / 047 / 048 - Pour bouchons 013.100.046 / 047 / 048 - Für Kappen 013.100.046 / 047 / 048	0,2

PE

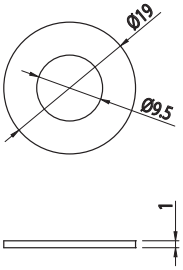

The reproduction of this catalogue is prohibited without authorization. We reserve the right to make changes to our products to enhance their features.

SCREW CLOSER CAP
TAPPO CHIUSURE VITE
TAPÓN TAPA-TORNILLO
BOUCHON DE FERMETURE VIS
ABDECKKAPPE FÜR SCHRAUBEN

Cod	Note	g
084.202.009	M6 screw, 5 mm hex socket head - Vite M6 esagono 5 - Tornillo M6 con hexágono de 5 mm - Vis M6 hexagone 5 - Schraube M6 Sechskant 5	1

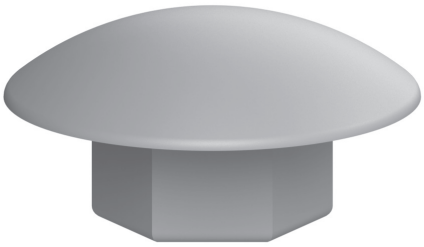

Grey polyamide
Poliammide grigio
Poliamida color gris
Polyamide gris
Polyamid grau

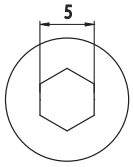

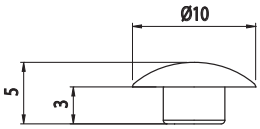

SCREW CLOSER CAP
TAPPO CHIUSURE VITE
TAPÓN TAPA-TORNILLO
BOUCHON DE FERMETURE VIS
ABDECKKAPPE FÜR SCHRAUBEN

STAINLESS STEEL

Cod	Note	g
013.100.046	M4	8,2
013.100.047	M5	7,9
013.100.048	M6	7,6

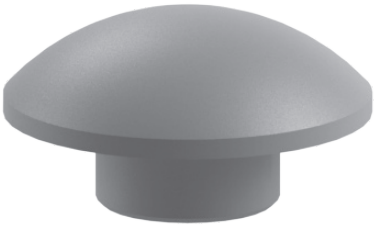

Stainless steel
Acciaio inox
Acero inoxidable
Acier inox
Rostfreier Stahl

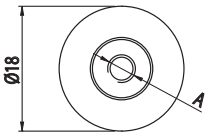

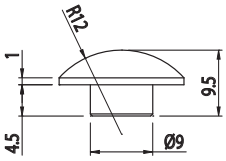

The reproduction of this catalogue is prohibited without authorization. We reserve the right to make changes to our products to enhance their features.

HOLE CLOSER CAP
TAPPO CHIUDI FORO
TAPÓN TAPA-AGUJERO
BOUCHON FERMETURE TROU
ABDECKKAPPE FÜR LÖCHER

Cod	Note	g
013.202.001	Ø11,50	1

RAL 7001

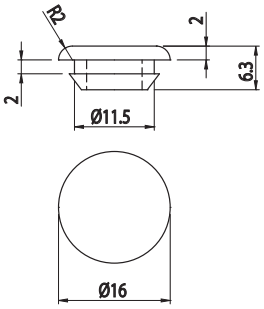

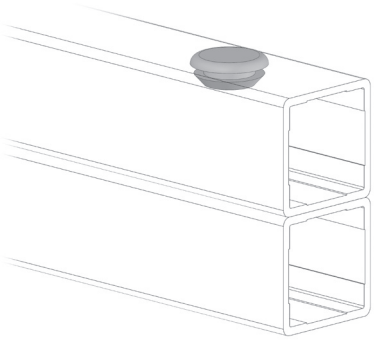

The reproduction of this catalogue is prohibited without authorization. We reserve the right to make changes to our products to enhance their features.

1-WAY JOINT Q25
GIUNTO 1 VIA Q25
EMPALME 1 VÍA Q25
JOINT 1 VOIE Q25
EIN-WEG-VERBINDER Q25

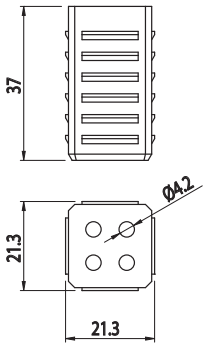

Cod	Note	g
013.025.104	For profile 013.025.00 - Per profilo 013.025.001 - Para perfil 013.025.001 - Pour profilé 013.025.001 - Für Profil 013.025.001	10

PA6+GF, RAL 7023

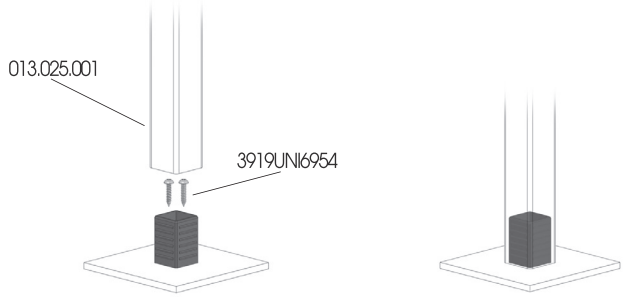

1-WAY JOINT Q25
GIUNTO 1 VIA Q25
EMPALME 1 VÍA Q25
JOINT 1 VOIE Q25
EIN-WEG-VERBINDER Q25

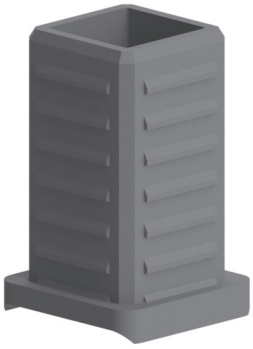

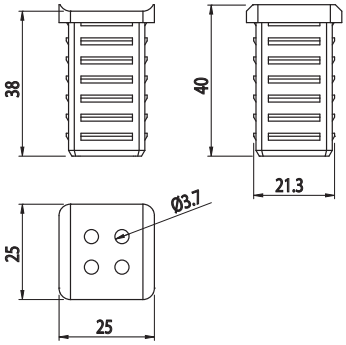

Cod	Note	g
013.025.105	For profile 013.025.001 - Per profilo 013.025.001 - Para perfil 013.025.001 - Pour profilé 013.025.001 - Für Profil 013.025.001	12

PA6+GF, RAL 7023

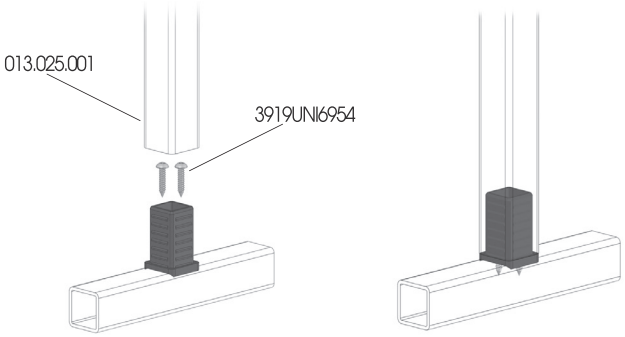

The reproduction of this catalogue is prohibited without authorization. We reserve the right to make changes to our products to enhance their features.

1-WAY JOINT Q25
GIUNTO 1 VIA Q25
EMPALME 1 VÍA Q25
JOINT 1 VOIE Q25
EIN-WEG-VERBINDER Q25

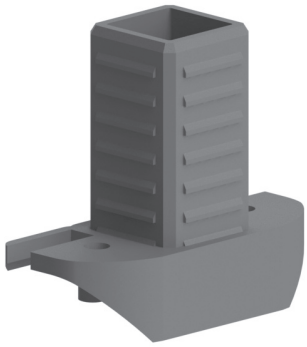

Cod	Note	g
013.025.108	For profiles 013.025.003 / 004 / 005 - Per profili 013.025.003 / 004 / 005 - Para perfiles 013.025.003 / 004 / 005 - Pour profilés 013.025.003 / 004 / 005 - Für Profile 013.025.003 / 004 / 005	17

PA6+GF, RAL 7023

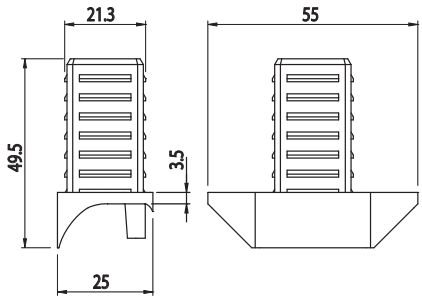

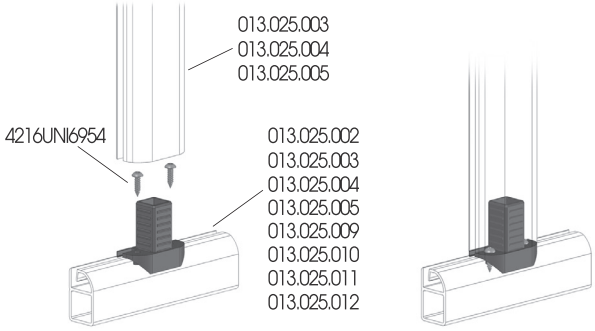

1-WAY JOINT Q25
GIUNTO 1 VIA Q25
EMPALME 1 VÍA Q25
JOINT 1 VOIE Q25
EIN-WEG-VERBINDER Q25

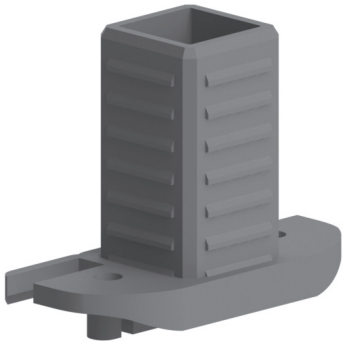

Cod	Note	g
013.025.109	For profiles 013.025.003 / 005 - Per profili 013.025.003 / 005 - Para perfiles 013.025.003 / 005 - Pour profilés 013.025.003 / 005 - Für Profile 013.025.003 / 005	16

PA6+GF, RAL 7023

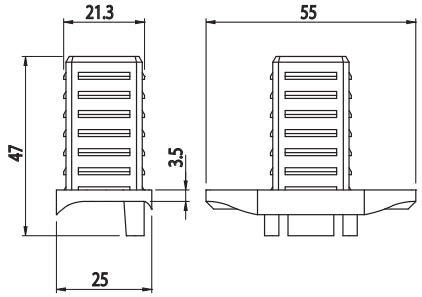

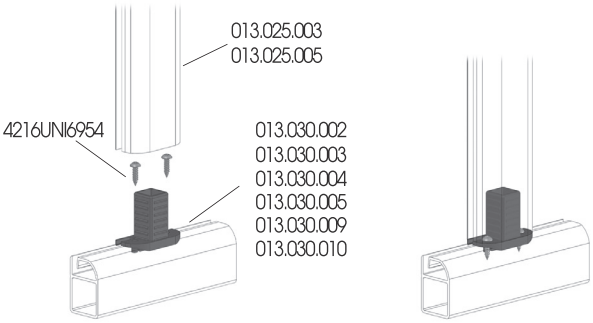

The reproduction of this catalogue is prohibited without authorization. We reserve the right to make changes to our products to enhance their features.

1-WAY JOINT Q25
GIUNTO 1 VIA Q25
EMPALME 1 VÍA Q25
JOINT 1 VOIE Q25
EIN-WEG-VERBINDER Q25

Cod	Note	g
013.025.110	For profiles 013.025.007 - Per profili 013.025.007 - Para perfiles 013.025.007 - Pour profilés 013.025.007 - Für Profile 013.025.007	17

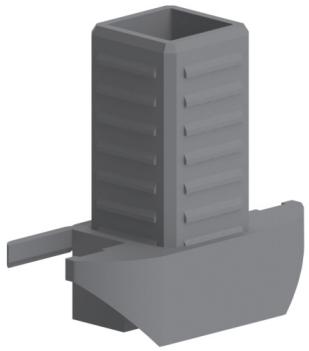

PA6+GF, RAL 7023

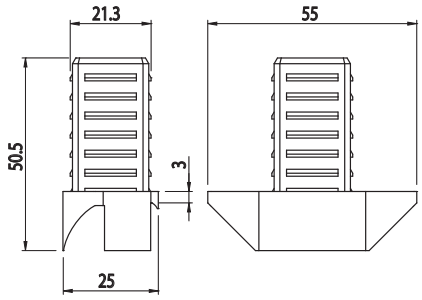

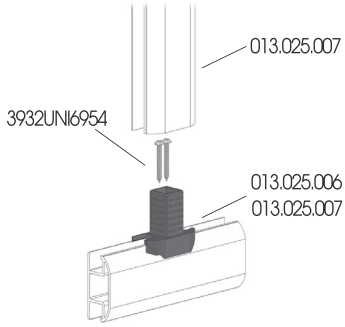

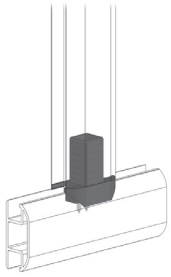

1-WAY JOINT Q25
GIUNTO 1 VIA Q25
EMPALME 1 VÍA Q25
JOINT 1 VOIE Q25
EIN-WEG-VERBINDER Q25

Cod	Note	g
013.025.111	For profiles 013.025.007 - Per profili 013.025.007 - Para perfiles 013.025.007 - Pour profilés 013.025.007 - Für Profile 013.025.007	16

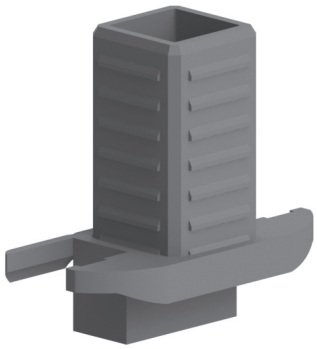

PA6+GF, RAL 7023

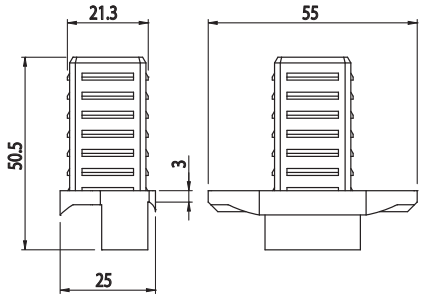

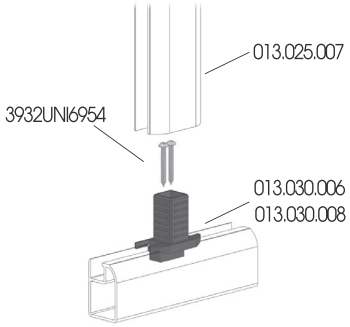

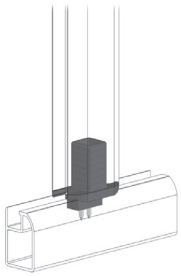

The reproduction of this catalogue is prohibited without authorization. We reserve the right to make changes to our products to enhance their features.

1-WAY JOINT
GIUNTO 1 VIA
EMPALME 1 VÍA
JOINT 1 VOIE
EIN-WEG-VERBINDER

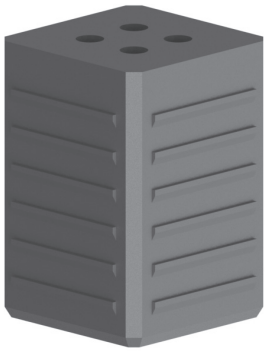

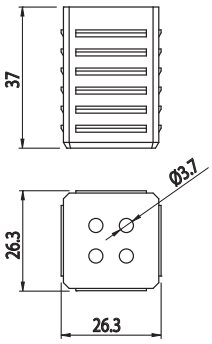

Cod	Note	g
013.030.104	For profile 013.030.001 - Per profilo 013.030.001 - Para perfil 013.030.001 - Pour profilé 013.030.001 - Für Profil 013.030.001	11

PA6+GF, RAL 7023

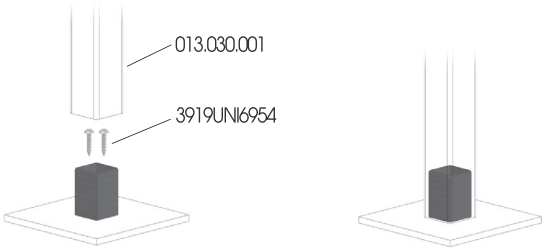

1-WAY JOINT
GIUNTO 1 VIA
EMPALME 1 VÍA
JOINT 1 VOIE
EIN-WEG-VERBINDER

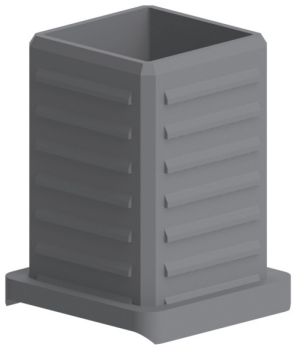

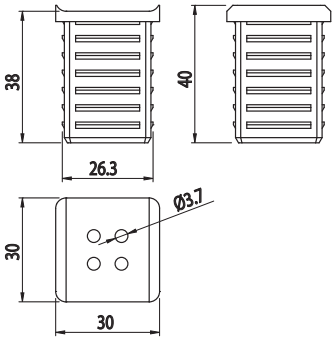

Cod	Note	g
013.030.105	For profile 013.030.001 - Per profilo 013.030.001 - Para perfil 013.030.001 - Pour profilé 013.030.001 - Für Profil 013.030.001	14

PA6+GF, RAL 7023

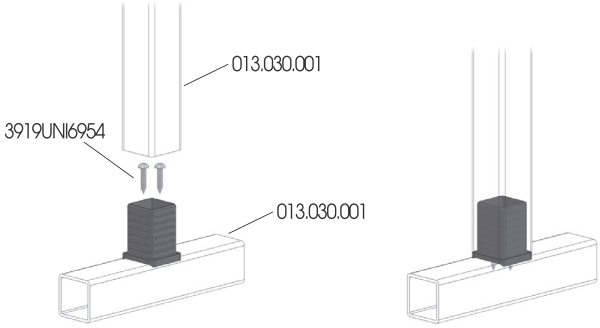

The reproduction of this catalogue is prohibited without authorization. We reserve the right to make changes to our products to enhance their features.

1-WAY JOINT
GIUNTO 1 VIA
EMPALME 1 VÍA
JOINT 1 VOIE
EIN-WEG-VERBINDER

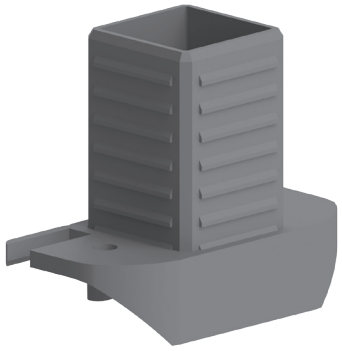

Cod	Note	g
013.030.132	For profile 013.030.002 / 003 - Per profilo 013.030.002 / 003 - Para perfil 013.030.002 / 003 - Pour profilé 013.030.002 / 003 - Für Profil 013.030.002 / 003	19,5

PA6+GF, RAL 7023

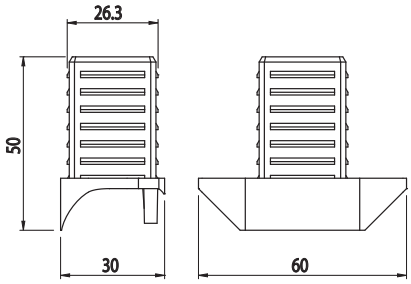

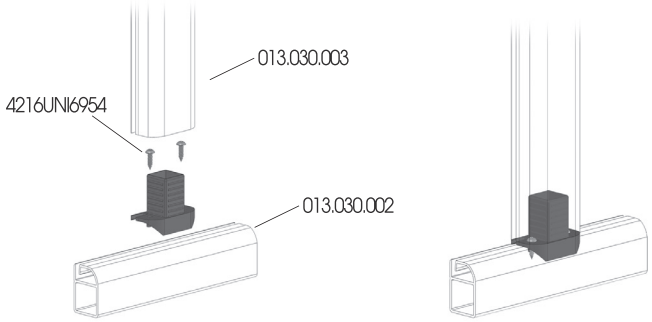

1-WAY JOINT
GIUNTO 1 VIA
EMPALME 1 VÍA
JOINT 1 VOIE
EIN-WEG-VERBINDER

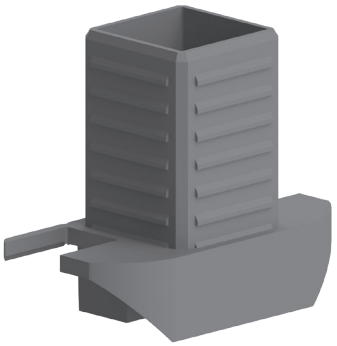

Cod	Note	g
013.030.133	For profile 013.030.006 / 014 - Per profilo 013.030.006 / 014 - Para perfil 013.030.006 / 014 - Pour profilé 013.030.006 / 014 - Für Profil 013.030.006 / 014	19,6

PA6+GF, RAL 7023

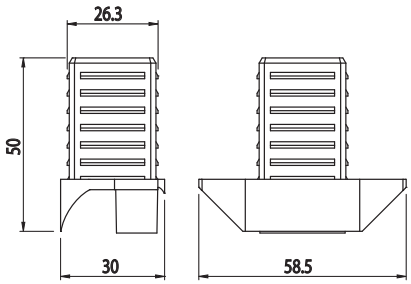

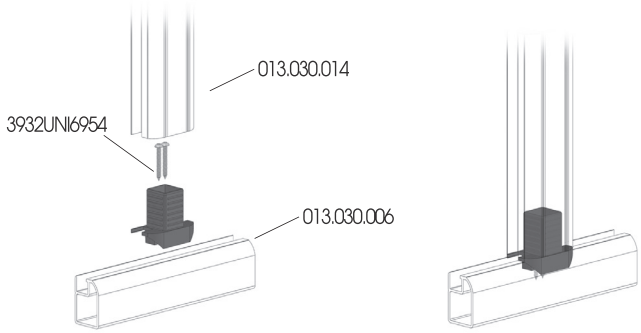

The reproduction of this catalogue is prohibited without authorization. We reserve the right to make changes to our products to enhance their features.

2-WAY JOINT Q25
GIUNTO 2 VIE Q25
EMPALME 2 VÍAS Q25
JOINT 2 VOIES Q25
ZWEI-WEGE-VERBINDER Q25

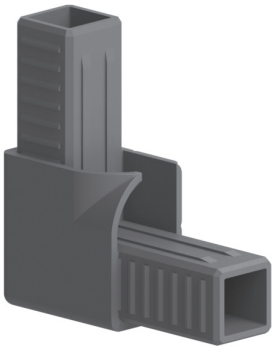

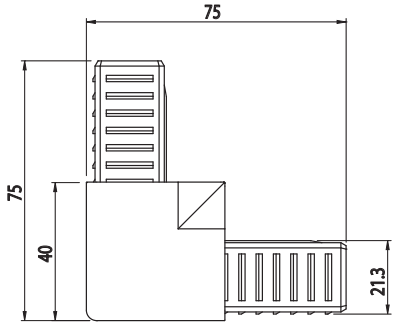

Cod	Note	Qt.y	Kg
013.025.101	For profiles 013.025.002 / 004 /006 Per profili 013.025.002 / 004 /006 Para perfiles 013.025.002 / 004 /006 Pour profilés 013.025.002 / 004 /006 Für Profile 013.025.002 / 004 /006	*1	0,056
013.025.101B		200	11,2

PA6+GF, RAL 7023

* **Minimum order quantity 10**
Quantità minima ordinabile 10
Cantidad mínima que se puede pedir 10
Quantité minimum de commande 10
Minimale Bestellmenge 10

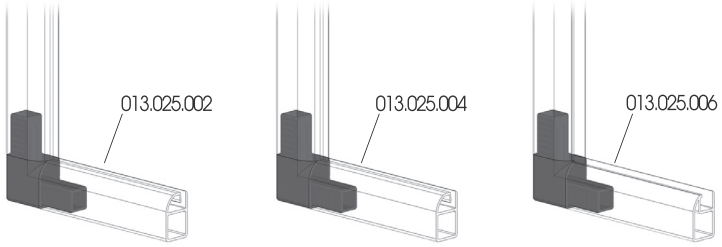

2-WAY JOINT Q25
GIUNTO 2 VIE Q25
EMPALME 2 VÍAS Q25
JOINT 2 VOIES Q25
ZWEI-WEGE-VERBINDER Q25

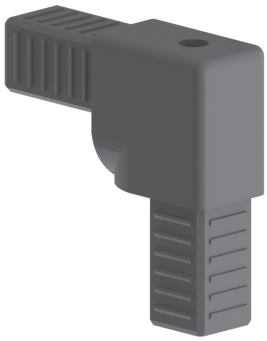

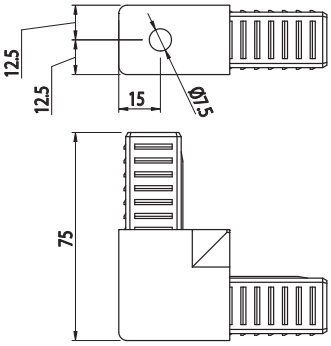

Cod	Note	g
013.025.135	For profiles 013.025.002 / 004 / 006 Per profili 013.025.002 / 004 / 006 Para perfiles 013.025.002 / 004 / 006 Pour profilés 013.025.002 / 004 / 006 Für Profile 013.025.002 / 004 / 006	55

PA6+GF, RAL 7023

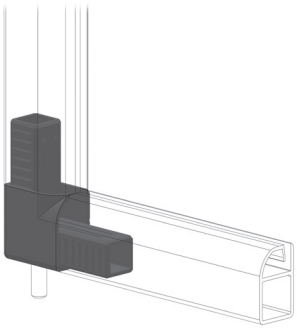

The reproduction of this catalogue is prohibited without authorization. We reserve the right to make changes to our products to enhance their features.

2-WAY JOINT Q25
GIUNTO 2 VIE Q25
EMPALME 2 VÍAS Q25
JOINT 2 VOIES Q25
ZWEI-WEGE-VERBINDER Q25

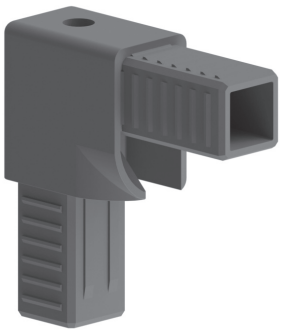

Cod	Note	g
013.025.136	For profiles 013.025.002 / 004 / 006 Per profili 013.025.002 / 004 / 006 Para perfiles 013.025.002 / 004 / 006 Pour profilés 013.025.002 / 004 / 006 Für Profile 013.025.002 / 004 / 006	55

PA6+GF, RAL 7023

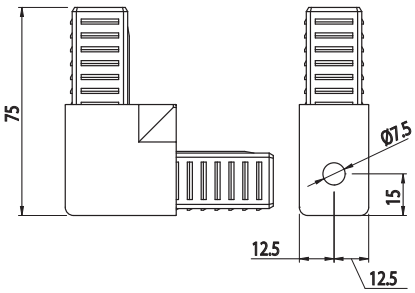

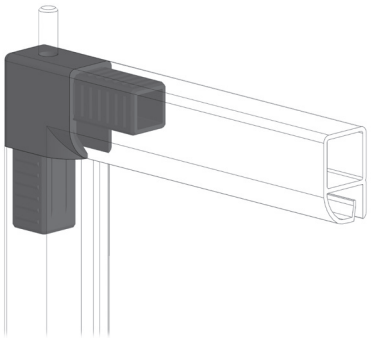

2-WAY JOINT Q25
GIUNTO 2 VIE Q25
EMPALME 2 VÍAS Q25
JOINT 2 VOIES Q25
ZWEI-WEGE-VERBINDER Q25

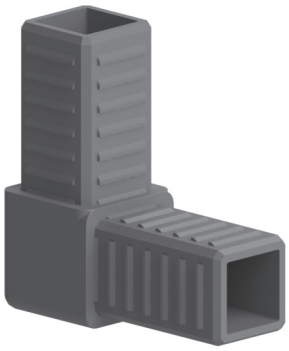

Cod	Note	Qt.y	Kg
013.025.102	For profile 013.025.001 - Per profilo 013.025.001 - Para perfil 013.025.001 - Pour profilé 013.025.001 - Für Profil 013.025.001	*1	0,033
013.025.102B		330	6,6

PA6+GF, RAL 7023

* **Minimum order quantity 10**
Quantità minima ordinabile 10
Cantidad mínima que se puede pedir 10
Quantité minimum de commande 10
Minimale Bestellmenge 10

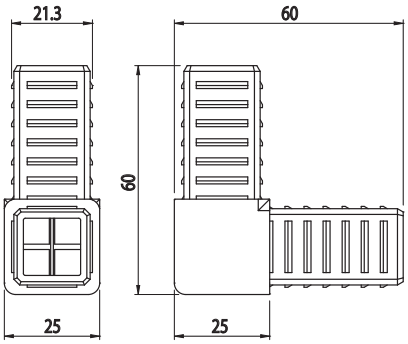

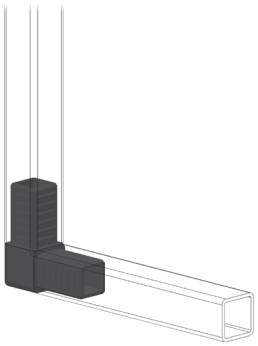

The reproduction of this catalogue is prohibited without authorization. We reserve the right to make changes to our products to enhance their features.

R15 2-WAY JOINT Q25
GIUNTO 2 VIE Q25 R15
EMPALME 2 VÍAS Q25 R15
JOINT 2 VOIES Q25 R15
ZWEI-WEGE-VERBINDER Q25 R15

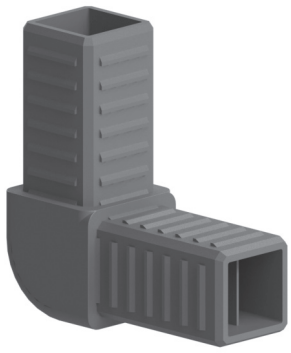

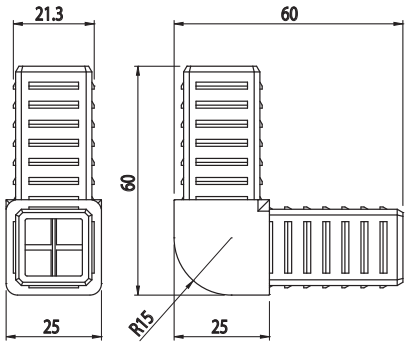

Cod	Note	Q.ty	Kg
013.025.106	For profile 013.025.001 - Per profilo 013.025.001 - Para perfil 013.025.001 - Pour profilé 013.025.001 - Für Profil 013.025.001	*1	0,032
013.025.106B		200	6,4

PA6+GF, RAL 7023

* **Minimum order quantity 10**
Quantità minima ordinabile 10
Cantidad mínima que se puede pedir 10
Quantité minimum de commande 10
Minimale Bestellmenge 10

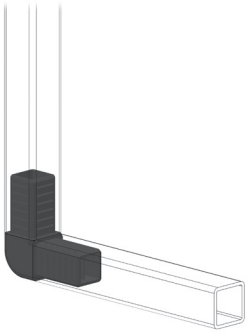

R15 2-WAY JOINT
GIUNTO 2 VIE R15
EMPALME 2 VÍAS R15
JOINT 2 VOIES R15
ZWEI-WEGE-VERBINDER R15

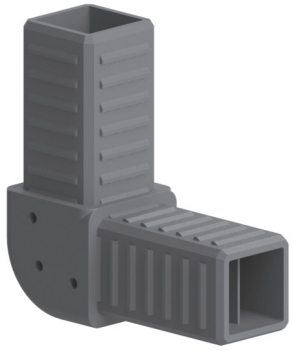

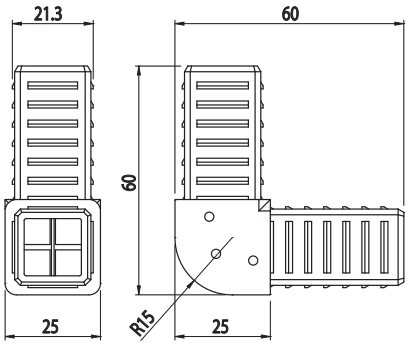

Cod	Note	g
013.025.113	For profile 013.025.002 / 004 / 006 - Per profilo 013.025.002 / 004 / 006 - Para perfil 013.025.002 / 004 / 006 - Pour profilé 013.025.002 / 004 / 006 - Für Profil 013.025.002 / 004 / 006	32

PA6+GF, RAL 7023

Threaded for side frame
Con fiori per cornice laterale
Roscado para marco lateral
Taraudé pour cadre latéral
Mit Gewinde für seitlichen Rahmen

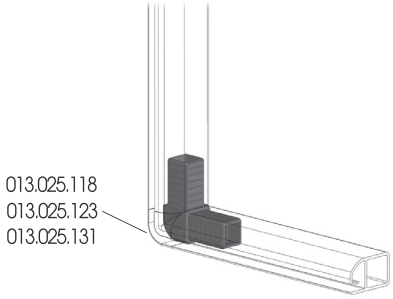

The reproduction of this catalogue is prohibited without authorization. We reserve the right to make changes to our products to enhance their features.

45° 2-WAY JOINT Q25
GIUNTO 2 VIE 45° Q25
EMPALME 2 VÍAS 45° Q25
JOINT 2 VOIES 45° Q25
ZWEI-WEGE-VERBINDER 45° Q25

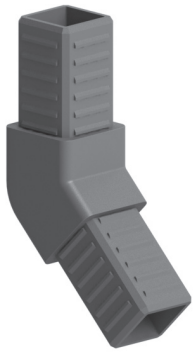

Cod	Note	g
013.025.107	For profile 013.025.001 - Per profilo 013.025.001 - Para perfil 013.025.001 - Pour profilé 013.025.001 - Für Profil 013.025.001	37

PA6+GF, RAL 7023

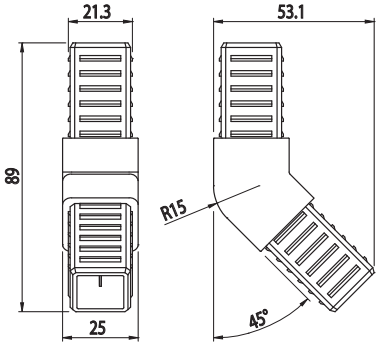

45° 2-WAY JOINT Q25
GIUNTO 2 VIE 45° Q25
EMPALME 2 VÍAS 45° Q25
JOINT 2 VOIES 45° Q25
ZWEI-WEGE-VERBINDER 45° Q25

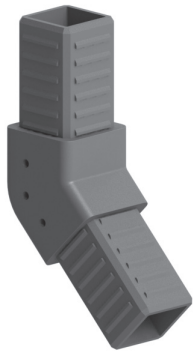

Cod	Note	g
013.025.112	For profile 013.025.002 / 004 / 006 - Per profilo 013.025.002 / 004 / 006 - Para perfil 013.025.002 / 004 / 006 - Pour profilé 013.025.002 / 004 / 006 - Für Profil 013.025.002 / 004 / 006	37

PA6+GF, RAL 7023

Threaded for side frame
Con fiori per cornice laterale
Roscado para marco lateral
Taraudé pour cadre latéral
Mit Gewinde für seitlichen Rahmen

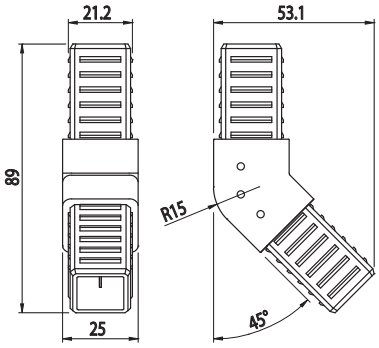

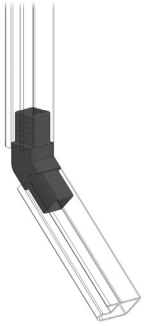

The reproduction of this catalogue is prohibited without authorization. We reserve the right to make changes to our products to enhance their features.

2-WAY JOINT
GIUNTO 2 VIE
EMPALME 2 VÍAS
JOINT 2 VOIES
ZWEI-WEGE-VERBINDER

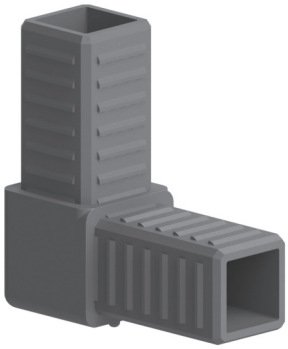

Cod	Note	g
013.025.114	For profile 013.025.002 / 004 / 006 - Per profilo 013.025.002 / 004 / 006 - Para perfil 013.025.002 / 004 / 006 - Pour profilé 013.025.002 / 004 / 006 - Für Profil 013.025.002 / 004 / 006	33

PA6+GF, RAL 7023

For outer frame
Per cornice esterna
Para marco externo
Pour cadre extérieur
Für Außenrahmen

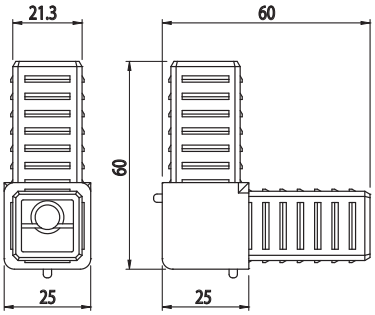

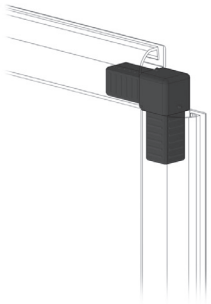

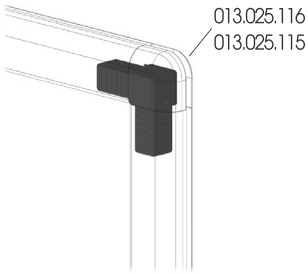

The reproduction of this catalogue is prohibited without authorization. We reserve the right to make changes to our products to enhance their features.

ARTICULATED JOINT
GIUNTO SNODATO
EMPALME ARTICULADO
JOINT ARTICULÉ
VERBINDER MIT GELENK

Cod	Note	g
013.025.122	For profile 013.025.001 - Per profilo 013.025.001 - Para perfil 013.025.001 - Pour profilé 013.025.001 - Für Profil 013.025.001	28

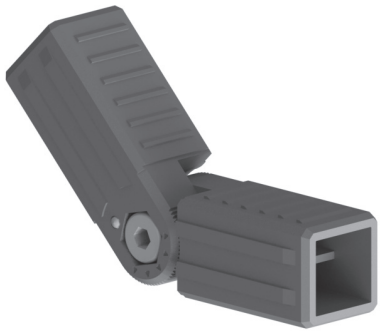

PA6+GF, RAL 7023

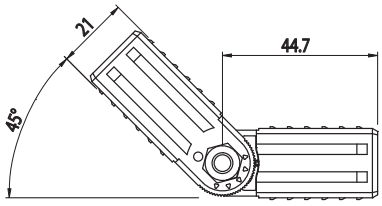

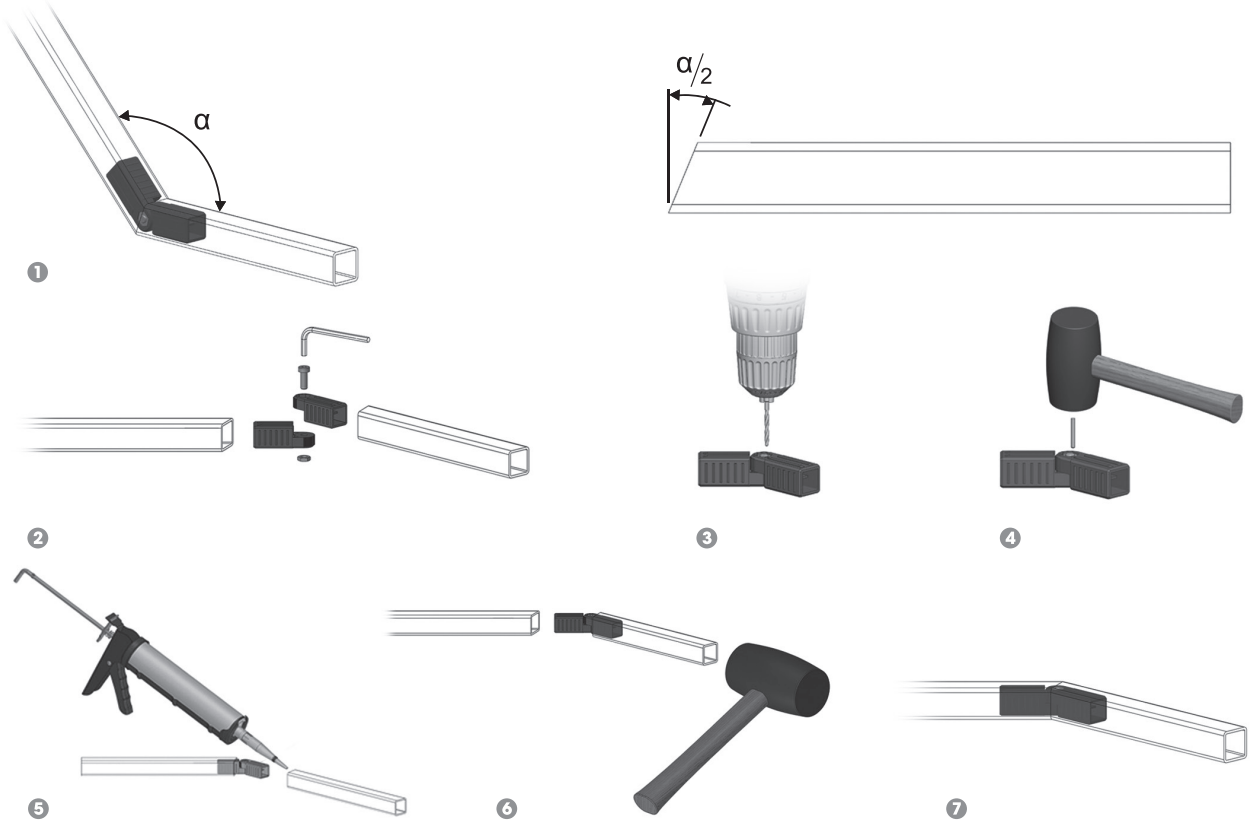

The reproduction of this catalogue is prohibited without authorization. We reserve the right to make changes to our products to enhance their features.

2-WAY JOINT WITH WHEEL FOR SLIDING SYSTEM

GIUNTO 2 VIE CON RUOTA PER SCORREVOLE
EMP. 2 VÍAS RUEDA PARA SISTEMA CORREDIZO
JOINT 2 VOIES ROUE POUR PORTE COULISSANTE
ZWEI-WEGE-VERBINDER MIT RAD FÜR SCHIEBETÜR

Cod	Note	g
013.025.132	For profile 013.025.012 / 013 - Per profilo 013.025.012 / 013 - Para perfil 013.025.012 / 013 - Pour profilé 013.025.012 / 013 - Für Profil 013.025.012 / 013	42

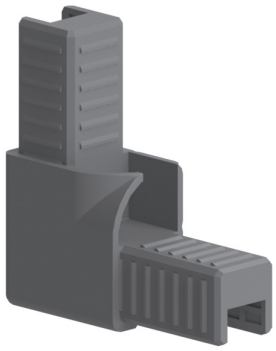

PA6+GF, RAL 7023

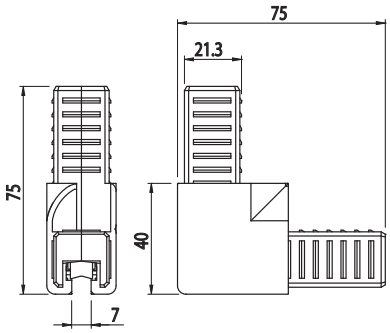

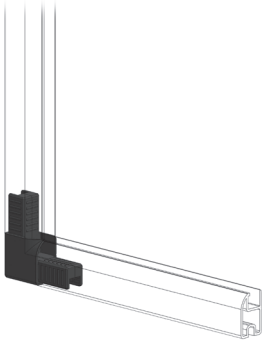

2-WAY JOINT

GIUNTO 2 VIE
EMPALME 2 VÍAS
JOINT 2 VOIES
ZWEI-WEGE-VERBINDER

Cod	Note	Q.ty	Kg
013.030.101	For profiles 013.030.002 / 004 / 006 - Per profilli 013.030.002 / 004 / 006 - Para perfiles 013.030.002 / 004 / 006 - Pour profilés 013.030.002 / 004 / 006 - Für Profile 013.030.002 / 004 / 006	*1	0,046
013.030.101B		150	10,95

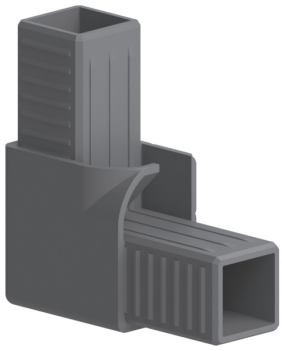

PA6+GF, RAL 7023

* **Minimum order quantity 10**
Quantità minima ordinabile 10
Cantidad mínima que se puede pedir 10
Quantité minimum de commande 10
Minimale Bestellmenge 10

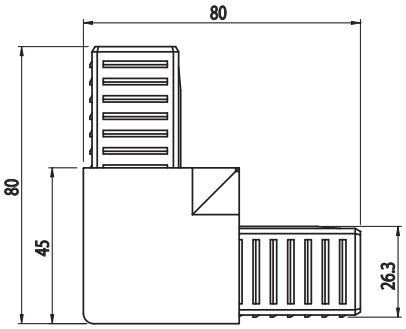

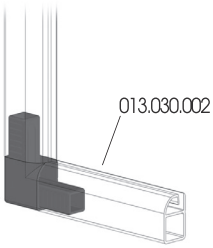

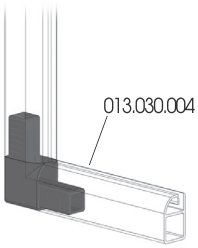

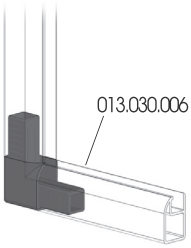

The reproduction of this catalogue is prohibited without authorization. We reserve the right to make changes to our products to enhance their features.

2-WAY JOINT
GIUNTO 2 VIE
EMPALME 2 VÍAS
JOINT 2 VOIES
ZWEI-WEGE-VERBINDER

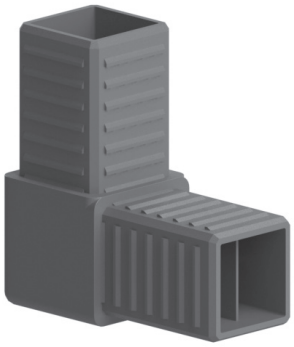

Cod	Note	Q.ty	Kg
013.030.102	For profile 013.030.001 - Per profillo 013.030.001 - Para perfil 013.030.001 - Pour profilé 013.030.001 - Für Profil 013.030.001	*1	0,046
013.030.102B		200	8,19

PA6+GF, RAL 7023

* **Minimum order quantity 10**
Quantità minima ordinabile 10
Cantidad mínima que se puede pedir 10
Quantité minimum de commande 10
Minimale Bestellmenge 10

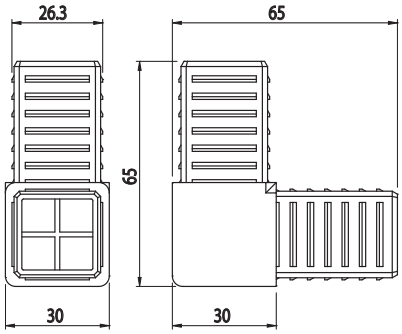

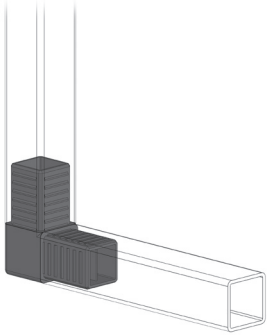

R15 2-WAY JOINT
GIUNTO 2 VIE R15
EMPALME 2 VÍAS R15
JOINT 2 VOIES R15
ZWEI-WEGE-VERBINDER R15

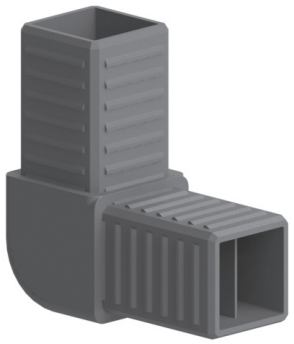

Cod	Note	g
013.030.106	For profile 013.030.001 - Per profilo 013.030.001 - Para perfil 013.030.001 - Pour profilé 013.030.001 - Für Profil 013.030.001	45

PA6+GF, RAL 7023

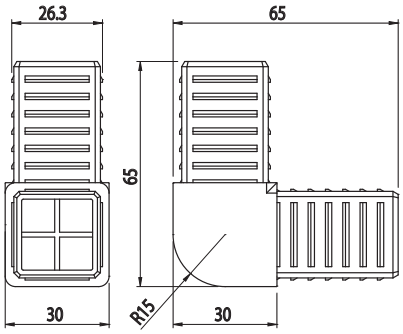

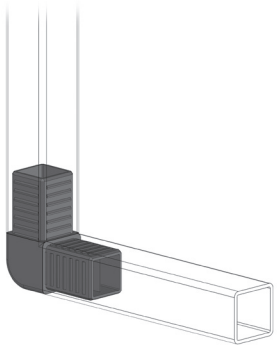

The reproduction of this catalogue is prohibited without authorization. We reserve the right to make changes to our products to enhance their features.

R15 2-WAY JOINT
GIUNTO 2 VIE R15
EMPALME 2 VÍAS R15
JOINT 2 VOIES R15
ZWEI-WEGE-VERBINDER R15

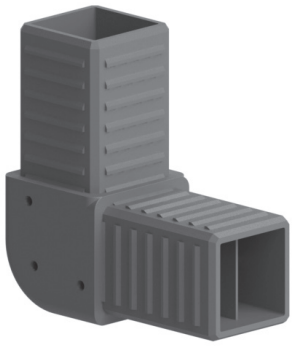

Cod	Note	g
013.030.113	For profile 013.030.002 / 004 / 006 - Per profilo 013.030.002 / 004 / 006 - Para perfil 013.030.002 / 004 / 006 - Pour profilé 013.030.002 / 004 / 006 - Für Profil 013.030.002 / 004 / 006	45

PA6+GF, RAL 7023

Threaded for side frame
Con fori per cornice laterale
Roscado para marco lateral
Taraudé pour pour cadre latéral
Mit Gewinde für seitlichen Rahmen

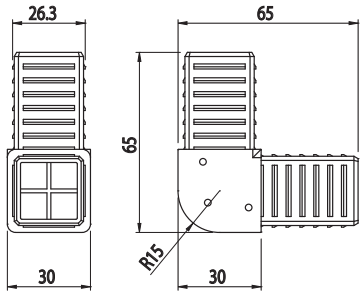

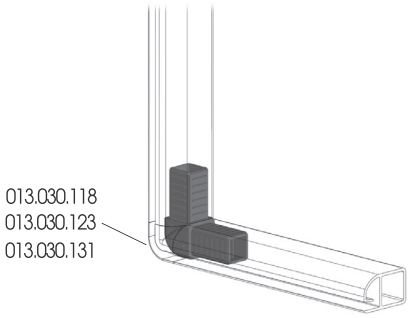

45° 2-WAY JOINT
GIUNTO 2 VIE 45°
EMPALME 2 VÍAS 45°
JOINT 2 VOIES 45°
ZWEI-WEGE-VERBINDER 45°

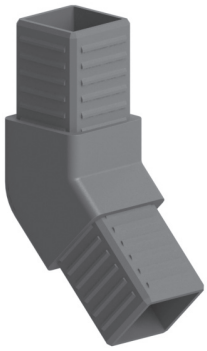

Cod	Note	g
013.030.107	For profile 013.030.001 - Per profilo 013.030.001 - Para perfil 013.030.001 - Pour profilé 013.030.001 - Für Profil 013.030.001	48

PA6+GF, RAL 7023

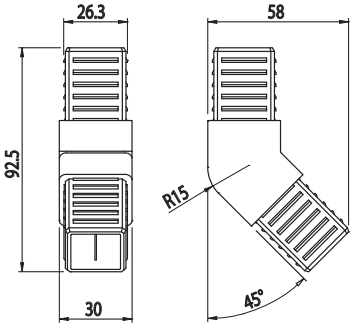

The reproduction of this catalogue is prohibited without authorization. We reserve the right to make changes to our products to enhance their features.

45° 2-WAY JOINT
GIUNTO 2 VIE 45°
EMPALME 2 VÍAS 45°
JOINT 2 VOIES 45°
ZWEI-WEGE-VERBINDER 45°

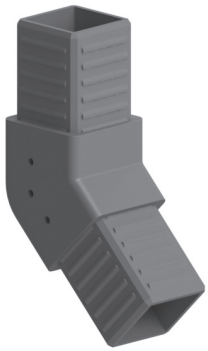

Cod	Note	g
013.030.112	For profile 013.030.002 / 004 / 006 - Per profilo 013.030.002 / 004 / 006 - Para perfil 013.030.002 / 004 / 006 - Pour profilé 013.030.002 / 004 / 006 - Für Profil 013.030.002 / 004 / 006	48

PA6+GF, RAL 7023

Threaded for side frame
Con fori per cornice laterale
Roscado para marco lateral
Taraudé pour pour cadre latéral
Mit Gewinde für seitlichen Rahmen

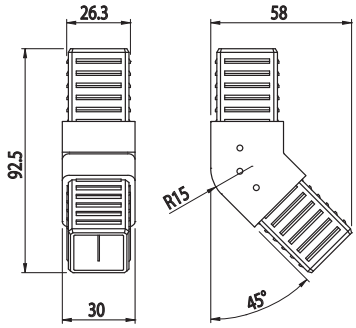

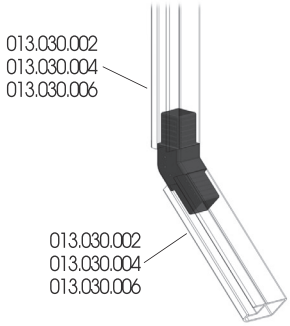

2-WAY JOINT
GIUNTO 2 VIE
EMPALME 2 VÍAS
JOINT 2 VOIES
ZWEI-WEGE-VERBINDER

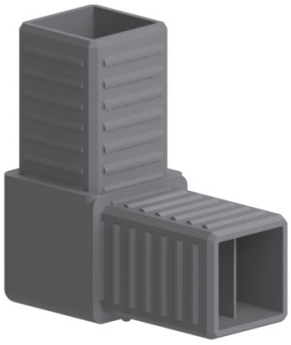

Cod	Note	g
013.030.114	For profile 013.030.002 / 004 / 006 - Per profilo 013.030.002 / 004 / 006 - Para perfil 013.030.002 / 004 / 006 - Pour profilé 013.030.002 / 004 / 006 - Für Profil 013.030.002 / 004 / 006	46

PA6+GF, RAL 7023

For outer frame
Per cornice esterna
Roscado para marco lateral
Taraudé pour pour cadre latéral
Mit Gewinde für seitlichen Rahmen

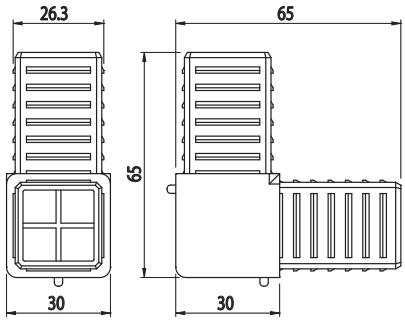

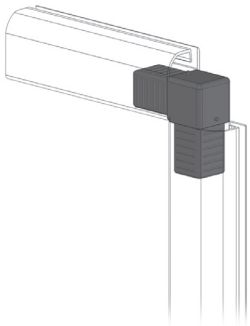

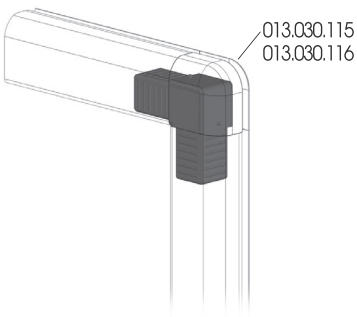

The reproduction of this catalogue is prohibited without authorization. We reserve the right to make changes to our products to enhance their features.

ARTICULATED JOINT
GIUNTO SNODATO
EMPALME ARTICULADO
JOINT ARTICULÉ
VERBINDER MIT GELENK

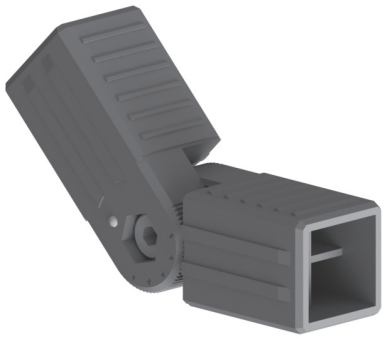

Cod	Note	g
013.030.122	For profile 013.030.001, profile cutting required - Per profilo 013.030.001, necessario taglio profilo - Para perfil 013.030.001, corte del perfil necesario - Pour profilé 013.030.001, nécessaire découpe profilé - Für Profil 013.030.001, Schnitt des Profils notwendig	43

PA6+GF, RAL 7023

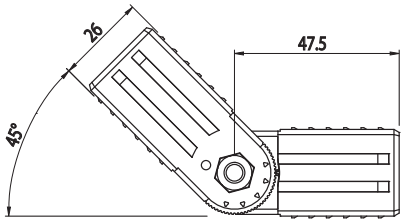

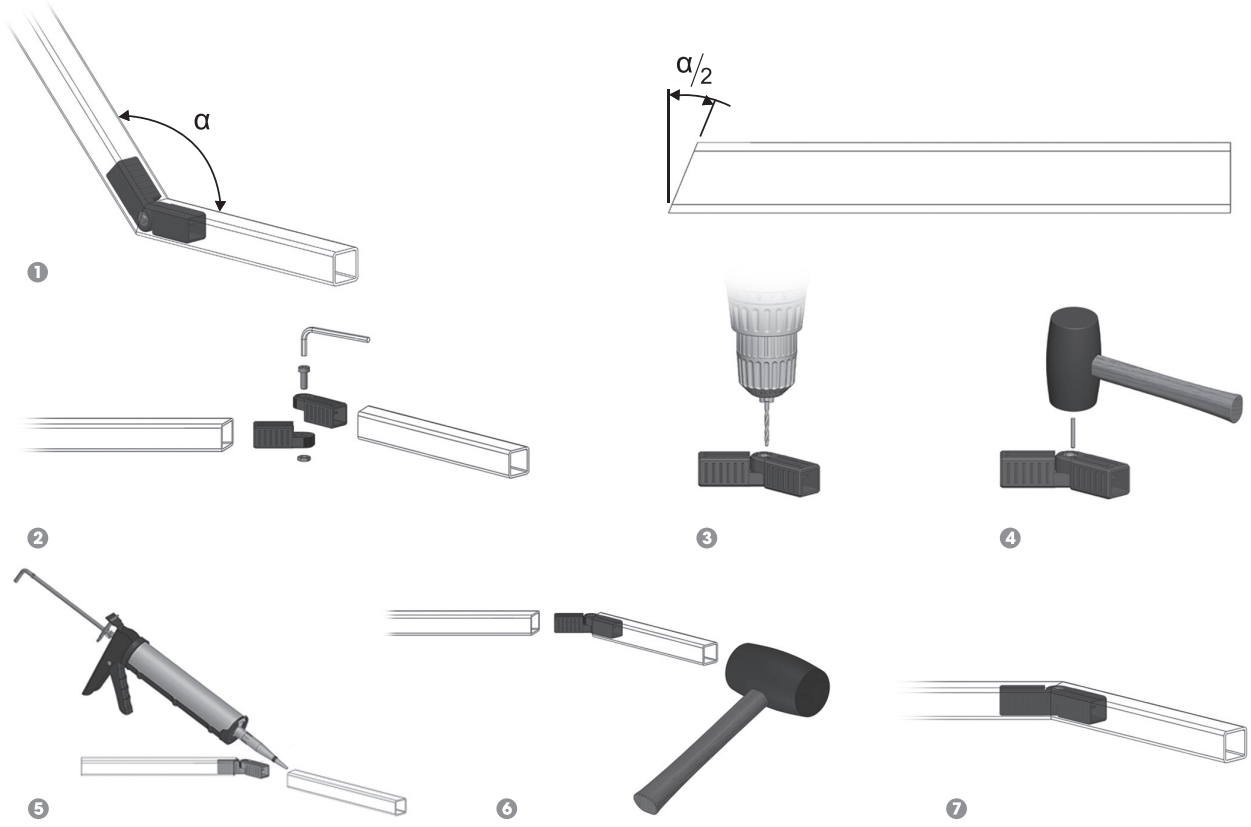

The reproduction of this catalogue is prohibited without authorization. We reserve the right to make changes to our products to enhance their features.

3-WAY JOINT Q25
GIUNTO 3 VIE Q25
EMPALME 3 VÍAS Q25
JOINT 3 VOIES Q25
DREI-WEGE-VERBINDER Q25

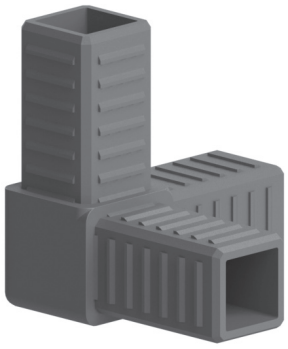

Cod	Note	Q.ty	g
013.025.103	For profile 013.025.001 - Per profilo 013.025.001 - Para perfil 013.025.001 - Pour profilé 013.025.001 - Für Profil 013.025.001	130	44

PA6+GF, RAL 7023

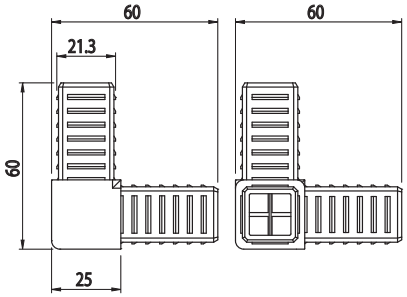

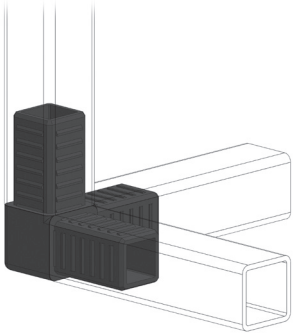

3-WAY JOINT
GIUNTO 3 VIE
EMPALME 3 VÍAS
JOINT 3 VOIES
DREI-WEGE-VERBINDER

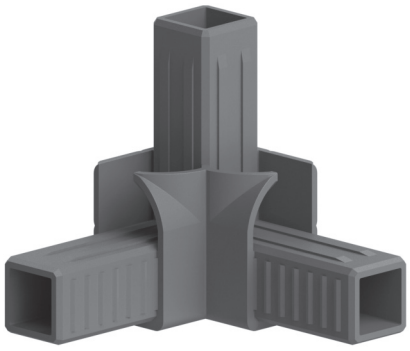

Cod	Note	Q.ty	g
013.025.121	For profile 013.025.008 / 009 / 002 / 006 - Per profilo 013.025.008 / 009 / 002 / 006 - Para perfil 013.025.008 / 009 / 002 / 006 - Pour profilé 013.025.008 / 009 / 002 / 006 - Für Profil 013.025.008 / 009 / 002 / 006	130	72

PA6+GF, RAL 7023

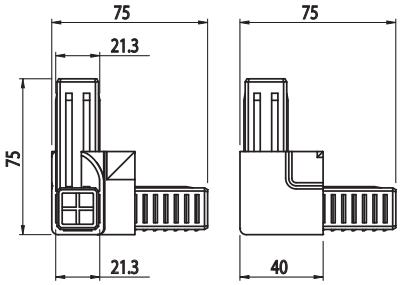

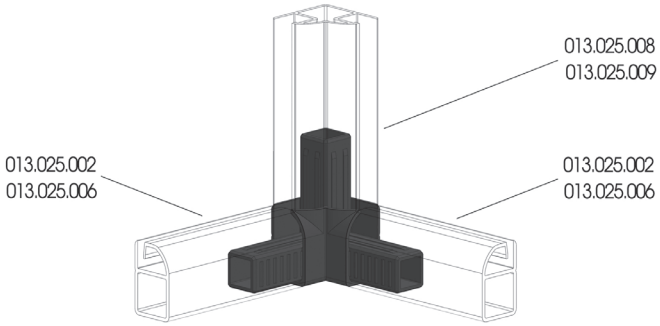

The reproduction of this catalogue is prohibited without authorization. We reserve the right to make changes to our products to enhance their features.

3-WAY JOINT
GIUNTO 3 VIE
EMPALME 3 VÍAS
JOINT 3 VOIES
DREI-WEGE-VERBINDER

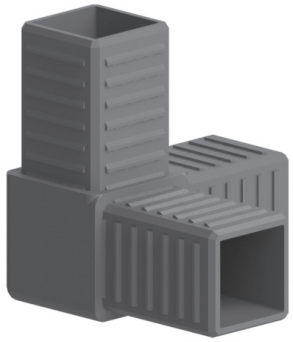

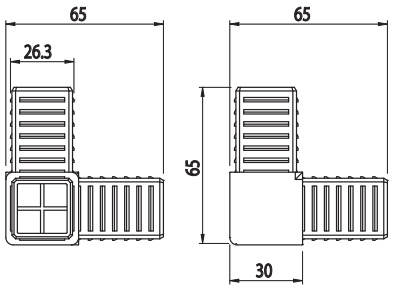

Cod	Note	Q.ty	g
013.030.103	For profile 013.030.001 - Per profillo 013.030.001 - Para perfil 013.030.001 - Pour profilé 013.030.001 - Für Profil 013.030.001	130	55

PA6+GF, RAL 7023

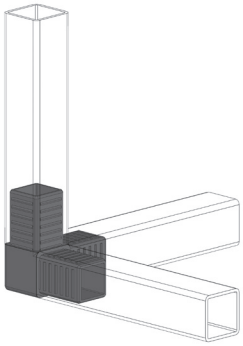

3-WAY JOINT
GIUNTO 3 VIE
EMPALME 3 VÍAS
JOINT 3 VOIES
DREI-WEGE-VERBINDER

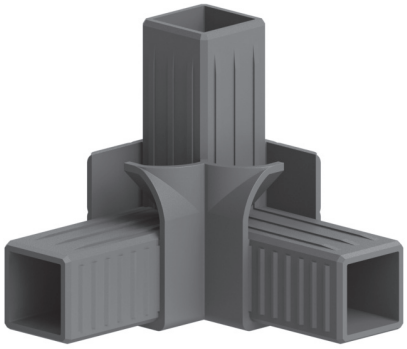

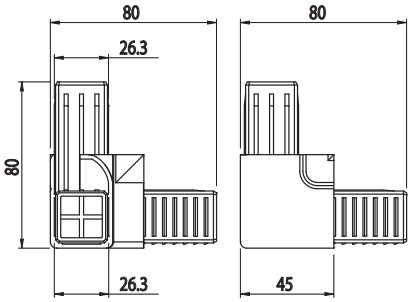

Cod	Note	Q.ty	g
013.030.121	For profile 013.030.008 / 009 / 002 / 006 - Per profilo 013.030.008 / 009 / 002 / 006 - Para perfil 013.030.008 / 009 / 002 / 006 - Pour profilé 013.030.008 / 009 / 002 / 006 - Für Profil 013.030.008 / 009 / 002 / 006	130	97

PA6+GF, RAL 7023

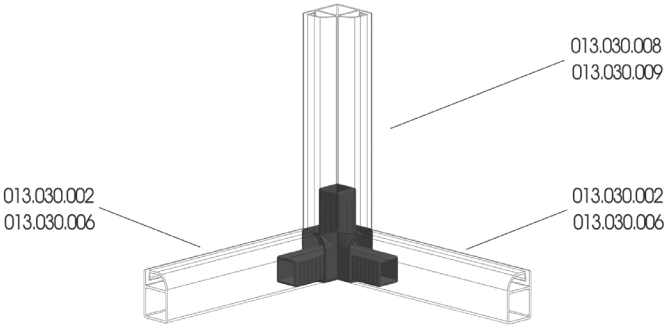

The reproduction of this catalogue is prohibited without authorization. We reserve the right to make changes to our products to enhance their features.

90° OUTER FRAME
CORNICE ESTERNA 90°
MARCO EXTERNO 90°
CADRE EXTÉRIEUR 90°
AUSSENRAHMEN 90°

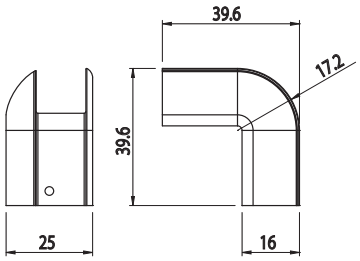

Cod	Note	g
013.025.115	For joint 013.025.114 - Per giunto 013.025.114 - Para empalme 013.025.114 - Pour joint 013.025.114 - Für Verbinder 013.025.114	9

PA6+GF, RAL 7023

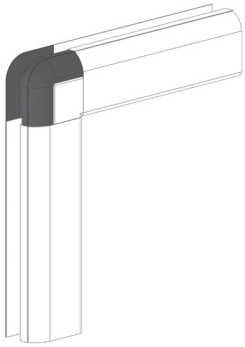

OUTER FRAME
CORNICE ESTERNA
MARCO EXTERNO
CADRE EXTÉRIEUR
AUSSENRAHMEN

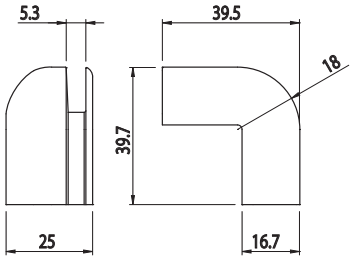

Cod	Note	g
013.025.116	For panel thk.4-5, joint 013.025.114 - Per pannello sp.4-5, per giunto 013.025.114 - Para panel esp.4-5, empalme 013.025.114 - Pour panneau épais.4-5, joint 013.025.114 - Für Platte D.4-5, Verbinder 013.025.114	11

PA6+GF, RAL 7023

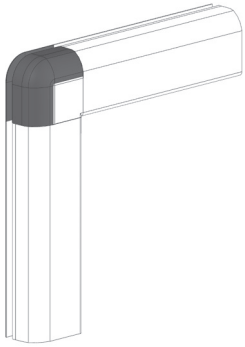

The reproduction of this catalogue is prohibited without authorization. We reserve the right to make changes to our products to enhance their features.

90° OUTER FRAME
CORNICE ESTERNA 90°
MARCO EXTERNO 90°
CADRE EXTÉRIEUR 90°
AUSSENRAHMEN 90°

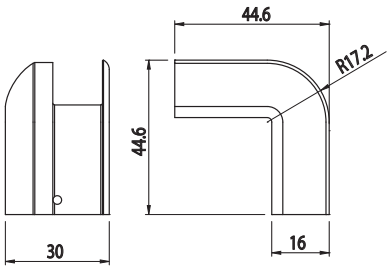

Cod	Note	g
013.030.115	For joint 013.030.114 - Per giunto 013.030.114 - Para empalme 013.030.114 - Pour joint 013.030.114 - Für Verbinder 013.030.114	12

PA6+GF, RAL 7023

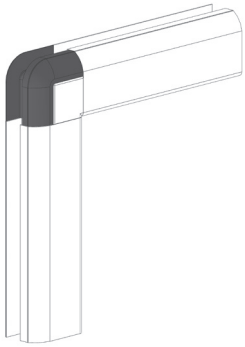

90° OUTER FRAME
CORNICE ESTERNA 90°
MARCO EXTERNO 90°
CADRE EXTÉRIEUR 90°
AUSSENRAHMEN 90°

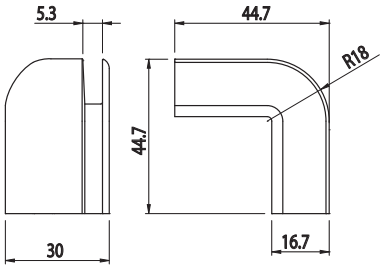

Cod	Note	g
013.030.116	For panel thk.4-5, joint 013.030.114 - Per pannello sp.4-5, giunto 013.030.114 - Para panel esp.4-5, empalme 013.030.114 - Pour panneau épais.4-5, joint 013.030.114 - Für Platte D.4-5, Verbinder 013.030.114	14

PA6+GF, RAL 7023

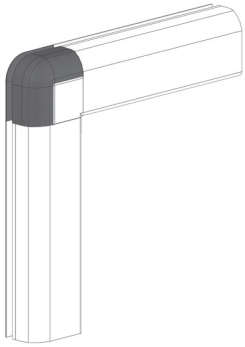

The reproduction of this catalogue is prohibited without authorization. We reserve the right to make changes to our products to enhance their features.

45° SIDE FRAME
CORNICE LATERALE 45°
MARCO LATERAL 45°
CADRE LATÉRAL 45°
SEITLICHER RAHMEN 45°

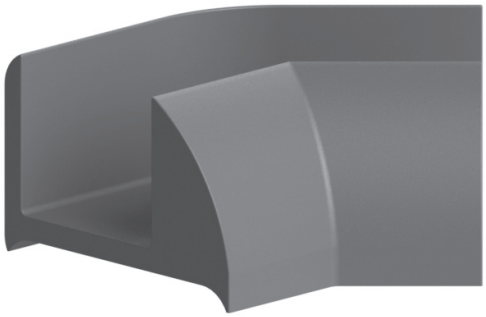

Cod	Note	g
013.025.128	For profile 013.025.006, joint 013.025.112 - Per profilo 013.025.006, giunto 013.025.112 - Para per perfil 013.025.006, empalme 013.025.112 - Pour profilé 013.025.006, joint 013.025.112 - Für Profil 013.025.006, Verbinder 013.025.112	5

PA6+GF, RAL 7023

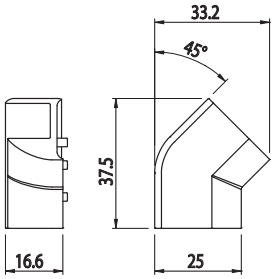

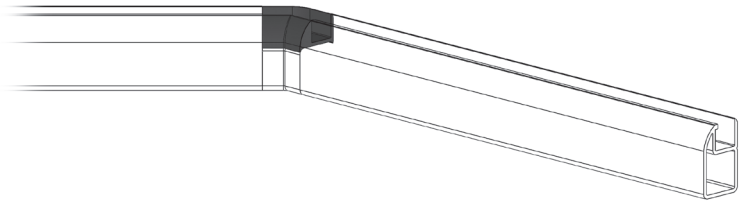

90° SIDE FRAME
CORNICE LATERALE 90°
MARCO LATERAL 90°
CADRE LATÉRAL 90°
SEITLICHER RAHMEN 90°

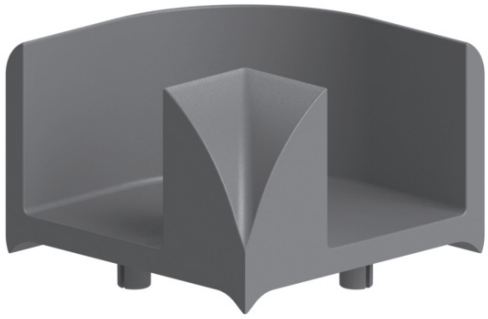

Cod	Note	g
013.025.131	For profile 013.025.006, joint 013.025.113 - Per profilo 013.025.006, giunto 013.025.113 - Para perfil 013.025.006, empalme, 013.025.113 - Pour profilé 013.025.006, joint 013.025.113 - Für Profil 013.025.006, Verbinder 013.025.113	4

PA6+GF, RAL 7023

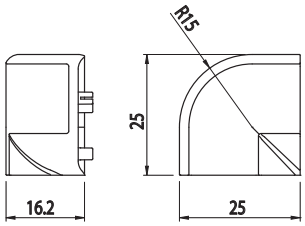

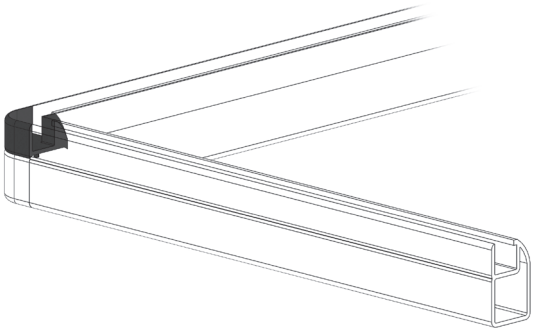

The reproduction of this catalogue is prohibited without authorization. We reserve the right to make changes to our products to enhance their features.

45° SIDE FRAME
CORNICE LATERALE 45°
MARCO LATERAL 45°
CADRE LATÉRAL 45°
SEITLICHER RAHMEN 45°

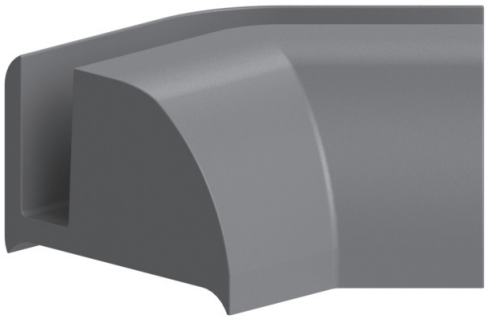

Cod	Note	g
013.025.117	For panel thk.4-5, joint 013.025.112, profile 013.025.002 -Per pannello sp.4-5, giunto 013.025.112, profilo 013.025.002 - Para panel esp.4-5, empalme 013.025.112, perfil 013.025.002 - Pour panneau épais.4-5, joint 013.025.112, profilé 013.025.002 - Für Platte D.4-5, Verbinder 013.025.112, Profil 013.025.002	7

PA6+GF, RAL 7023

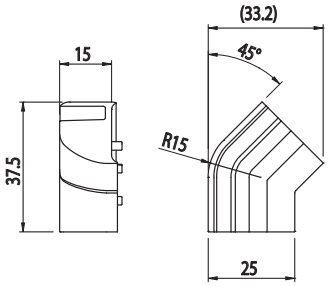

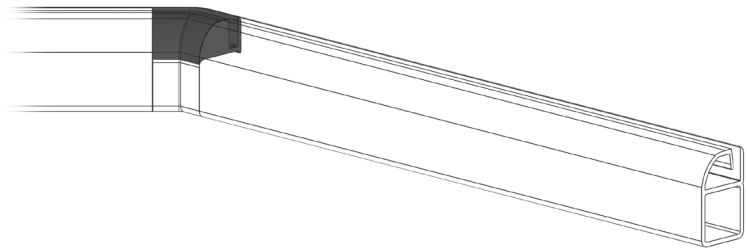

90° SIDE FRAME
CORNICE LATERALE 90°
MARCO LATERAL 90°
CADRE LATÉRAL 90°
SEITLICHER RAHMEN 90°

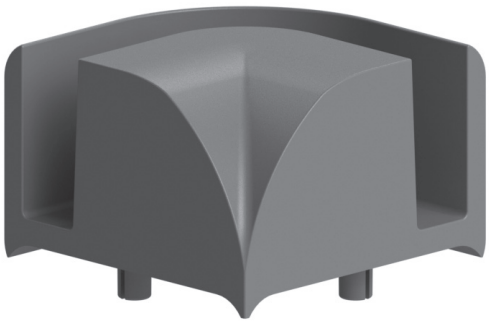

Cod	Note	g
013.025.118	For panel thk.4-5, joint 013.025.113, profile 013.025.002 - Per pannello sp.4-5, giunto 013.025.113, profilo 013.025.002 - Para panel esp.4-5, empalme 013.025.113, perfil 013.025.002 - Pour panneau épais.4-5, joint 013.025.113, profilé 013.025.002 - Für Platte D.4-5, Verbinder 013.025.113, Profil 013.025.002	6

PA6+GF, RAL 7023

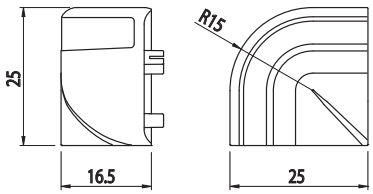

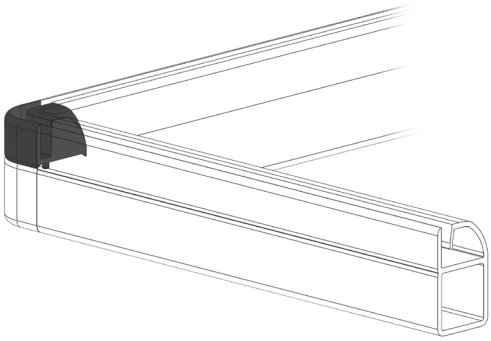

The reproduction of this catalogue is prohibited without authorization. We reserve the right to make changes to our products to enhance their features.

90° SIDE FRAME
CORNICE LATERALE 90°
MARCO LATERAL 90°
CADRE LATÉRAL 90°
SEITLICHER RAHMEN 90°

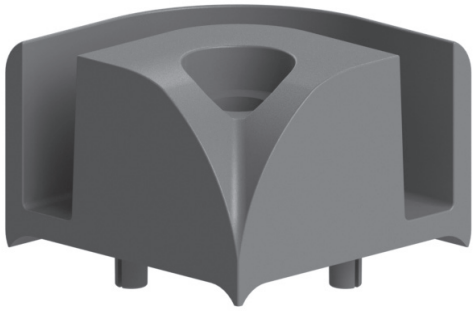

Cod	Note	g
013.025.123	For panel thk. 4-5, joint 013.025.113, profile 013.025.002 - Per pannello sp. 4-5, giunto 013.025.113, profilo 013.025.002 - Para panel esp. 4-5, empalme 013.025.113, perfil 013.025.002 - Pour panneau épais. 4-5, joint 013.025.113, profilé 013.025.002 - Für Platte D. 4-5, Verbinder 013.025.113, Profil 013.025.002	6

PA6+GF, RAL 7023

Screws included
Viti incluse
Tornillos incluidos
Vis fournies
Schrauben im Lieferumfang enthalten

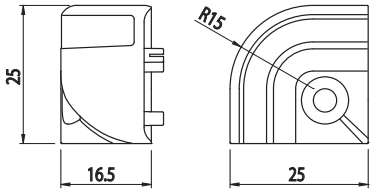

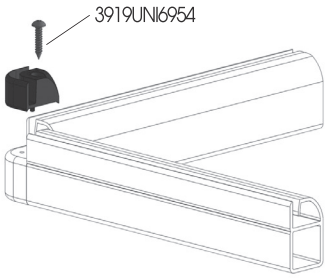

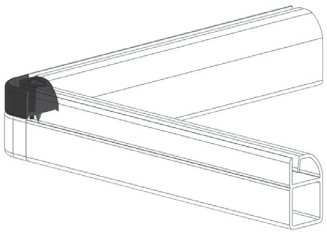

45° SIDE FRAME
CORNICE LATERALE 45°
MARCO LATERAL 45°
CADRE LATÉRAL 45°
SEITLICHER RAHMEN 45°

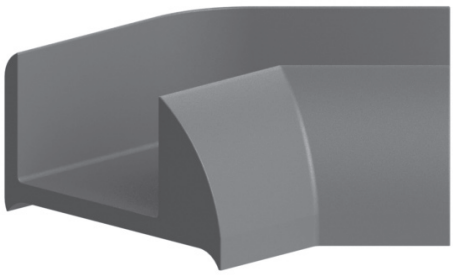

Cod	Note	g
013.030.128	For profile 013.030.006, joint 013.030.112 - Per profilo 013.030.006, giunto 013.030.112 - Para perfil 013.030.006, empalme 013.030.112 - Pour profilé 013.030.006, joint 013.030.112 - Für Profil 013.030.006, Verbinder 013.030.112	7

PA6+GF, RAL 7023

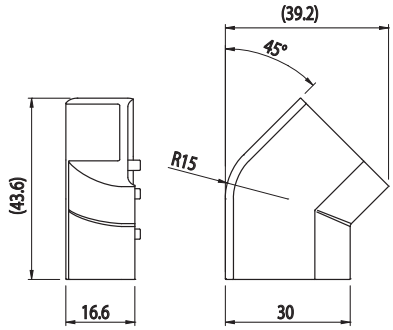

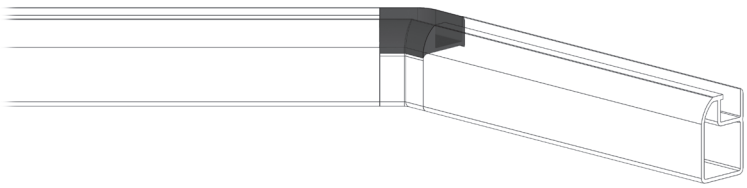

The reproduction of this catalogue is prohibited without authorization. We reserve the right to make changes to our products to enhance their features.

90° SIDE FRAME

CORNICE LATERALE 90°
MARCO LATERAL 90°
CADRE LATÉRAL 90°
SEITLICHER RAHMEN 90°

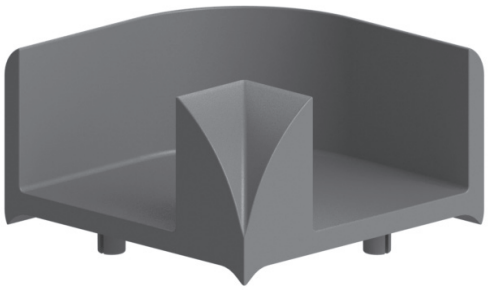

Cod	Note	g
013.030.131	For joint 013.030.113, profile 013.030.006 - Per giunto 013.030.113, profilo 013.030.006 - Para empalme 013.030.113, perfil 013.030.006 - Pour joint 013.030.113, profilé 013.030.006 - Für Verbinder 013.030.113, Profil 013.030.006	8

PA6+GF, RAL 7023

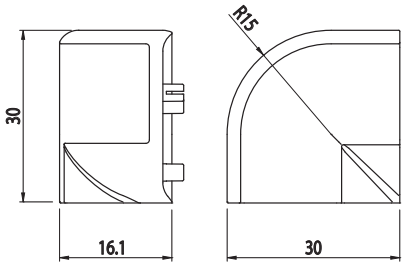

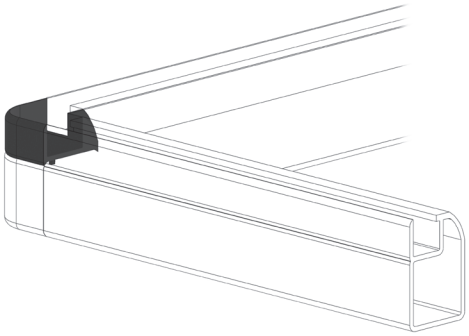

45° SIDE FRAME

CORNICE LATERALE 45°
MARCO LATERAL 45°
CADRE LATÉRAL 45°
SEITLICHER RAHMEN 45°

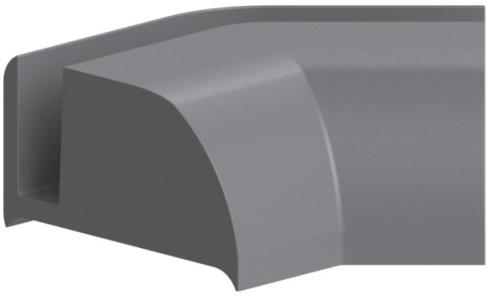

Cod	Note	g
013.030.117	For panel thk.4-5, joint 013.030.112, profile 013.030.002 - Per pannello sp.4-5, giunto 013.030.112, profilo 013.030.002 - Para panel esp.4-5, empalme 013.030.112, perfil 013.030.002 - Pour panneau épais.4-5, joint 013.030.112, profilé 013.030.002 - Für Platte D.4-5, Verbinder 013.030.112, Profil 013.030.002	9

PA6+GF, RAL 7023

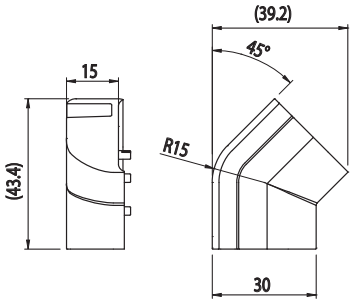

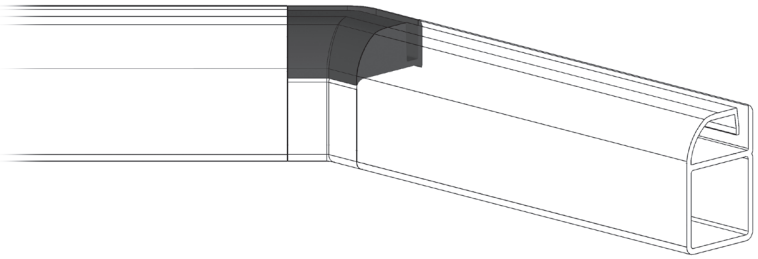

The reproduction of this catalogue is prohibited without authorization. We reserve the right to make changes to our products to enhance their features.

90° SIDE FRAME
CORNICE LATERALE 90°
MARCO LATERAL 90°
CADRE LATÉRAL 90°
SEITLICHER RAHMEN 90°

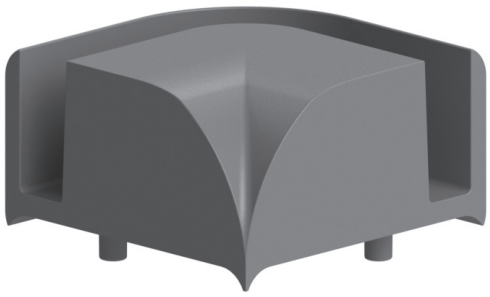

Cod	Note	g
013.030.118	For panel thk.4-5, joint 013.030.113, profile 013.030.002 - Per pannello sp.4-5, giunto 013.030.113, profilo 013.030.002 - Para panel esp.4-5, empalme 013.030.113, perfil 013.030.002 - Pour panneau épais.4-5, joint 013.030.113, profilé 013.030.002 - Für Platte D.4-5, Verbinder 013.030.113, Profil 013.030.002	7

PA6+GF, RAL 7023

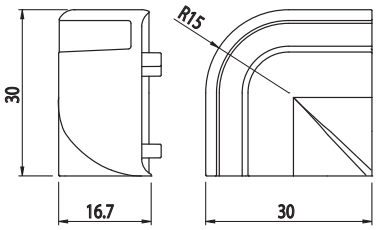

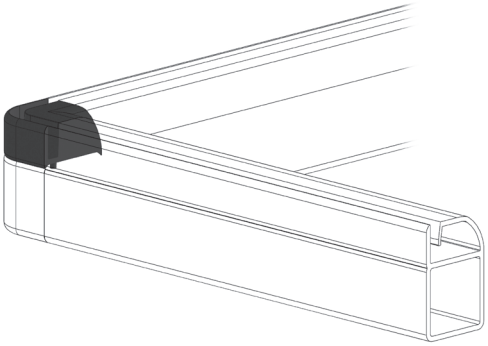

90° SIDE FRAME
CORNICE LATERALE 90°
MARCO LATERAL 90°
CADRE LATÉRAL 90°
SEITLICHER RAHMEN 90°

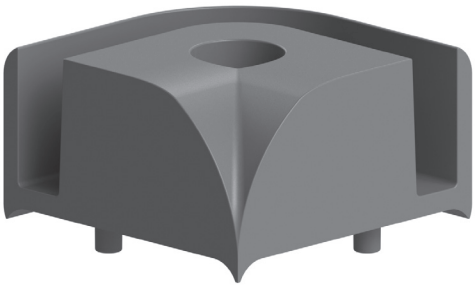

Cod	Note	g
013.030.123	For panel thk. 4-5, joint 013.030.113, profile 013.030.002 - Per pannello sp. 4-5, giunto 013.030.113, profilo 013.030.002 - Para panel esp. 4-5, empalme 013.030.113, perfil 013.030.002 - Pour panneau épais. 4-5, joint 013.030.113, profilé 013.030.002 - Für Platte D. 4-5, Verbinder 013.030.113, Profil 013.030.002	8

PA6+GF, RAL 7023

Screws included
Viti incluse
Tornillos incluidos
Vis fournies
Schrauben im Lieferumfang enthalten

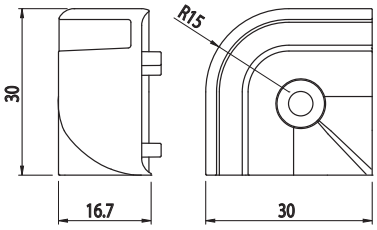

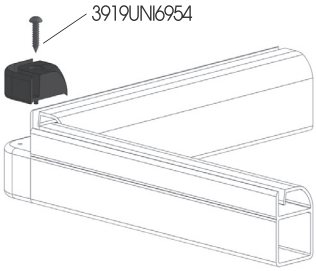

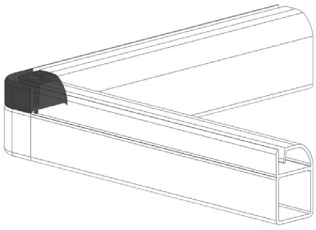

The reproduction of this catalogue is prohibited without authorization. We reserve the right to make changes to our products to enhance their features.

45° INNER FRAME
CORNICE INTERNA 45°
MARCO INTERIOR 45°
CADRE INTÉRIEUR 45°
INNENRAHMEN 45°

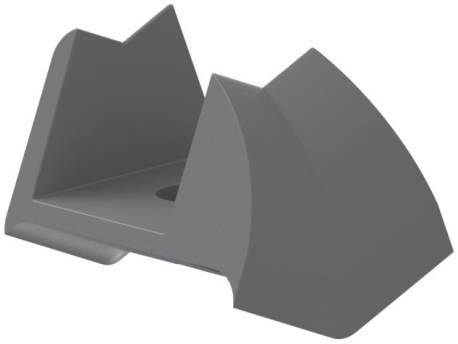

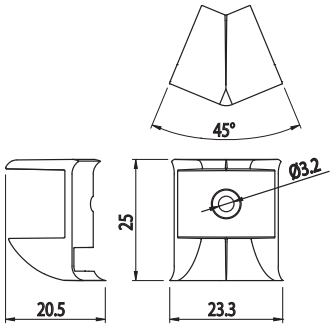

Cod	Note	g
013.025.125	Fastening with screw, joint 013.025.107 / 112 - Fissaggio con vite, giunto 013.025.107 / 112 - Fijación con tornillo, empalme 013.025.107 / 112 - Fixation à vis, joint 013.025.107 / 112 - Befestigung mit Schraube, Verbinder 013.025.107 / 112	3

PA6+GF, RAL 7023

Screws included
Viti incluse
Tornillos incluidos
Vis fournies
Schrauben im Lieferumfang enthalten

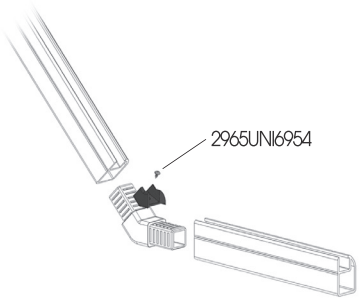

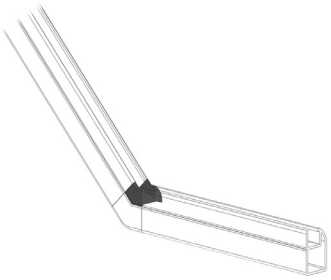

45° INNER FRAME
CORNICE INTERNA 45°
MARCO INTERIOR 45°
CADRE INTÉRIEUR 45°
INNENRAHMEN 45°

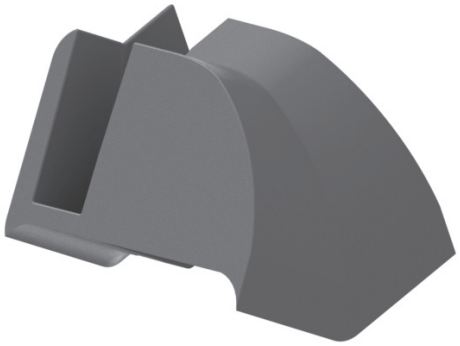

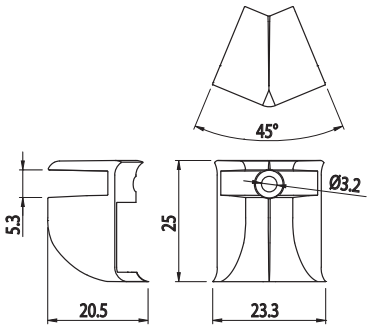

Cod	Note	g
013.025.124	For joint 013.025.107 / 112 - Per giunto 013.025.107 / 112 - Para empalme 013.025.107 / 112 - Pour joint 013.025.107 / 112 - Für Platte Verbinder 013.025.107 / 112	3

PA6+GF, RAL 7023

Screws included
Viti incluse
Tornillos incluidos
Vis fournies
Schrauben im Lieferumfang enthalten

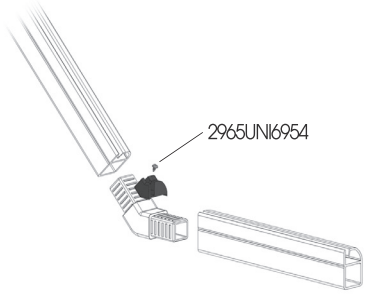

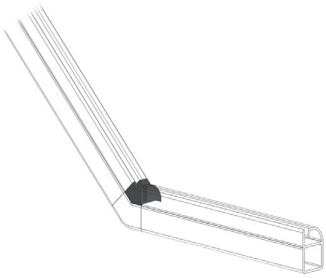

The reproduction of this catalogue is prohibited without authorization. We reserve the right to make changes to our products to enhance their features.

45° INNER FRAME
CORNICE INTERNA 45°
MARCO INTERIOR 45°
CADRE INTÉRIEUR 45°
INNENRAHMEN 45°

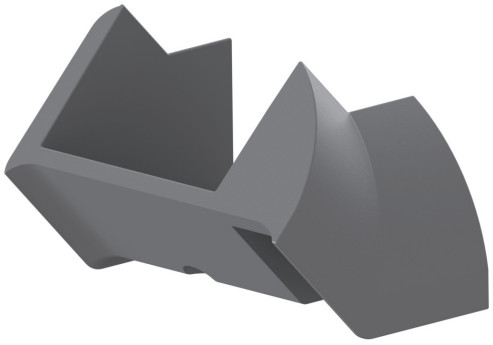

Cod	Note	g
013.030.125	Fastening with screw, joint 013.030.107 / 112 - Fissaggio con vite, giunto 013.030.107 / 112 - Fijación con tornillo, empalme 013.030.107 / 112 - Fixation à vis, joint 013.030.107 / 112 - Befestigung mit Schraube, Verbinder 013.030.107 / 112	5

PA6+GF, RAL 7023

Screws included
Viti incluse
Tornillos incluidos
Vis fournies
Schrauben im Lieferumfang enthalten

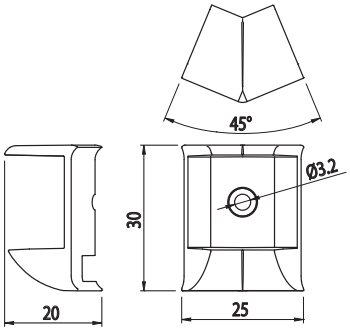

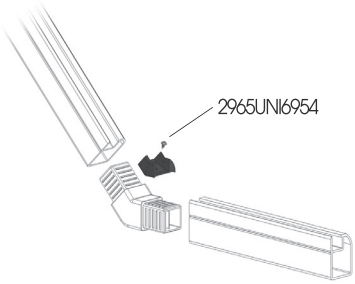

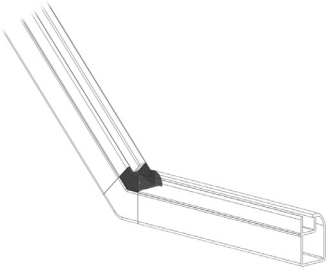

45° INNER FRAME
CORNICE INTERNA 45°
MARCO INTERIOR 45°
CADRE INTÉRIEUR 45°
INNENRAHMEN 45°

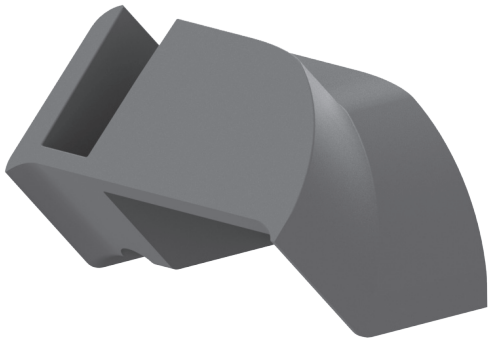

Cod	Note	g
013.030.124	Fastening with screw, joint 013.030.107 / 112 - Fissaggio con vite, giunto 013.030.107 / 112 - Fijación con tornillo, empalme 013.030.107 / 112 - Fixation à vis, joint 013.030.107 / 112 - Befestigung mit Schraube, Verbinder 013.030.107 / 112	5

PA6+GF, RAL 7023

Screws included
Viti incluse
Tornillos incluidos
Vis fournies
Schrauben im Lieferumfang enthalten

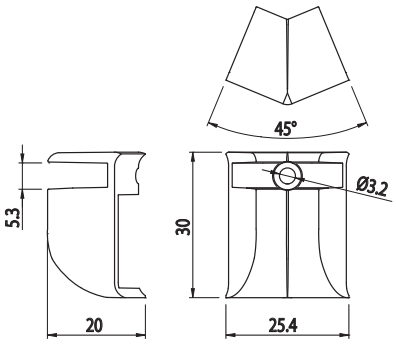

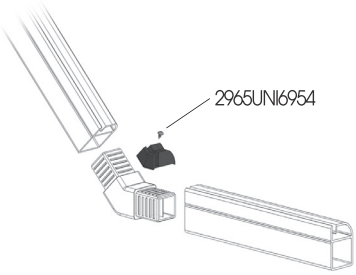

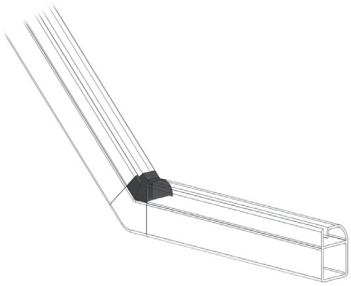

The reproduction of this catalogue is prohibited without authorization. We reserve the right to make changes to our products to enhance their features.

FOOT FLANGE
FLANGIA PER PIEDI
BRIDA PARA PIES
BRIDE POUR PIEDS
FLANSCH FÜR FÜSSE

Cod	Note	g
C030209	For M12 feet - Per piedi M12 - Para pies M12 - Pour pieds M12 - Für Füße M12	110

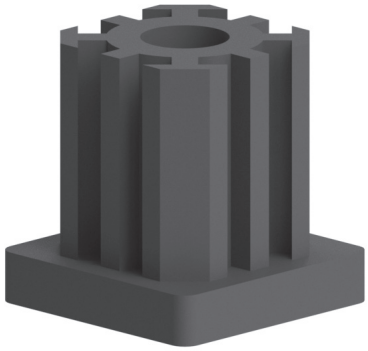

Black polyamide
Poliammide nero
Poliamida color negro
Polyamide noir
Polyamid schwarz

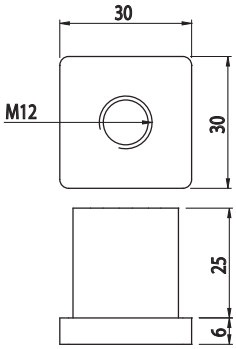

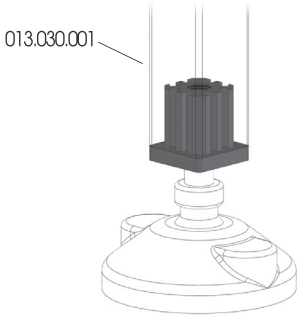

VIBRATION DAMPING ARTICULATED FEET
PIEDI SNODATI ANTIVIBRANTI
PIES ARTICULADOS ANTIVIBRACIÓN
PIEDS ARTICULÉS ANTIVIBRATIONS
GELENKFÜSSE MIT SCHWINGUNGSSCHUTZ

Cod	▲Kg	D	d	A	B	C	E	F	Ch	g
084.402.003	1000	80	M12	96	33	63	54	9	10	88
084.402.007	1000	80	M12	156	33	123	54	9	10	143
084.402.009	1000	30	M12	147	24	123	-	-	10	125

Black polyamide and zinc plated steel
Poliammide nero e acciaio zincato
Poliamida color negro y acero galvanizado
Polyamide noir et acier zingué
Schwarzes Polyamid und verzinkter Stahl

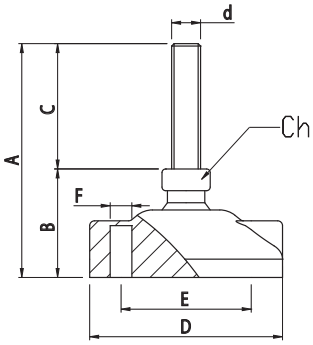

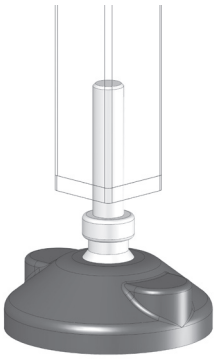

The reproduction of this catalogue is prohibited without authorization. We reserve the right to make changes to our products to enhance their features.

ANTI-SLIP PLATES
ANTIVIBRANTI
PLACAS ANTIDESLIZANTES
PASTILLES ANTI-VIBRATION
ANTI-SLIP PLATTEN

Cod	Note	g
084.403.003	Ø 80	36

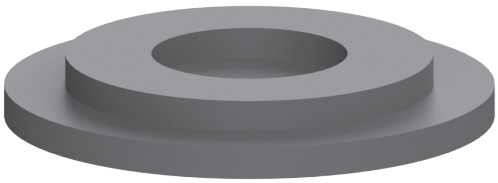

Black oil-resistant synthetic rubber
Gomma sintetica antiolio nera
Goma sintética antiaceite color negro
Caoutchouc synthétique anti-huile noir
Ölbeständiger Synthesekautschuk schwarz

The reproduction of this catalogue is prohibited without authorization. We reserve the right to make changes to our products to enhance their features.

PANEL GASKET
GUARNIZIONE PANNELLI
JUNTA PARA PANELES
JOINT POUR PANNEAUX
DICHTUNG FÜR PLATTEN

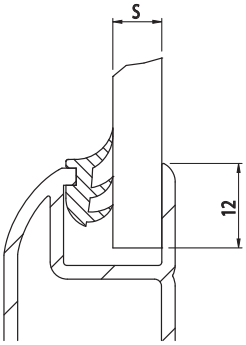

Cod	S	Col		g/m
084.512.014T	2 - 3		60 m	172
084.512.015T	4		70 m	116
084.512.006T	5		90 m	106
084.512.003T	8		200 m	50
084.512.016T	10		380 m	22,5

Thermoplastic rubber
Gomma termoplastica
Goma termoplástica
Caoutchouc thermoplastique
Thermoplastischer Gummi

PANEL GASKET
GUARNIZIONE PANNELLI
JUNTA PARA PANELES
JOINT POUR PANNEAUX
DICHTUNG FÜR PLATTEN

Cod	S	Col		g/m
013.512.001	1,2 - 2 mm		150 m	62,3

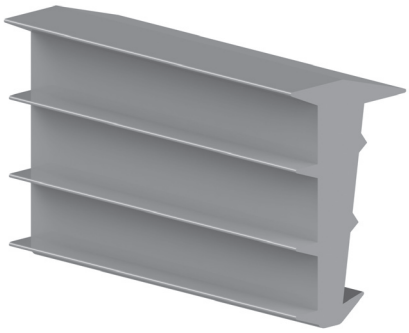

TPE

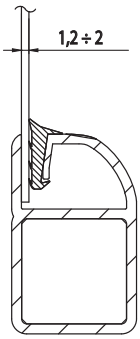

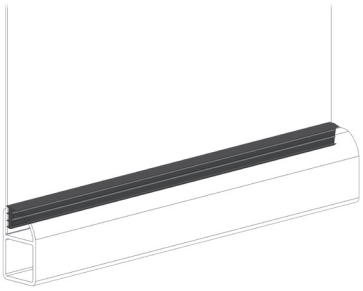

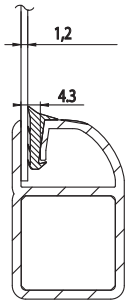

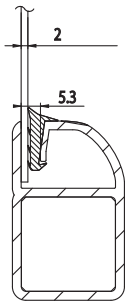

The reproduction of this catalogue is prohibited without authorization. We reserve the right to make changes to our products to enhance their features.

PANEL GASKET
GUARNIZIONE PANNELLI
JUNTA PARA PANELES
JOINT POUR PANNEAUX
DICHTUNG FÜR PLATTEN

Cod	S	Col		g/m
013.512.002	1,2 - 2 mm	■	100 m	77,5

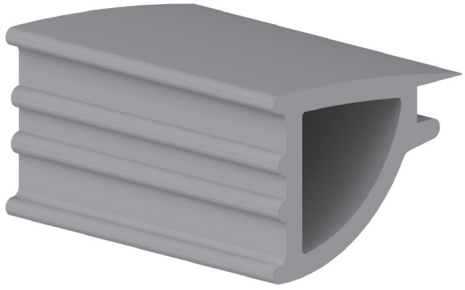

TPE

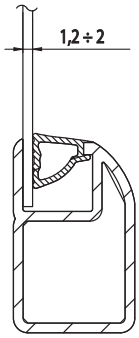

PANEL GASKET
GUARNIZIONE PANNELLI
JUNTA PARA PANELES
JOINT POUR PANNEAUX
DICHTUNG FÜR PLATTEN

Cod	S	Col		g/m
013.512.003	5 mm	■	100 m	58,4

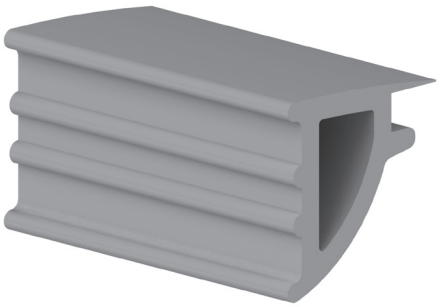

TPE

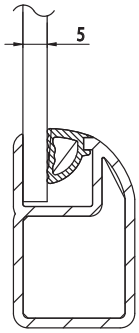

The reproduction of this catalogue is prohibited without authorization. We reserve the right to make changes to our products to enhance their features.

PANEL GASKET
GUARNIZIONE DI BATTUTA
JUNTA PARA PANELES
JOINT POUR PANNEAUX
FALZDICHTUNG

Cod	S	Col		g/m
084.512.017	-	■	400 m	20

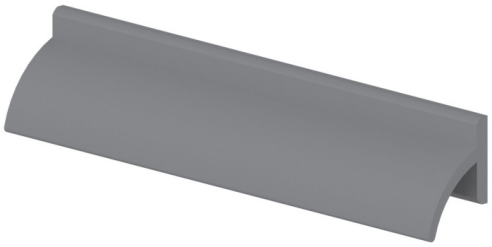

Thermoplastic rubber
Gomma termoplastica
Goma termoplástica
Caoutchouc thermoplastique
Thermoplastischer Gummi

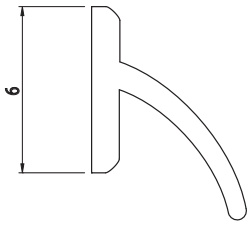

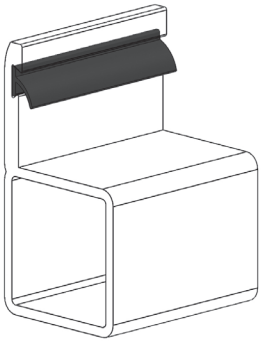

POLYCARBONATE PANEL
PANNELLO IN POLICARBONATO
PANEL DE POLICARBONATO
PANNEAU EN POLYCARBONATE
PLATTE AUS POLYCARBONAT

Cod	Color	S	AxB	Kg/m²
030LEX	Trasparente	3 mm	2050 x 3050	3,6
031LEX	Trasparente	4 mm	2050 x 3050	4,8
032LEX	Trasparente	5 mm	2050 x 3050	6
034LEX	Trasparente	8 mm	2050 x 3050	9,6
035LEX	Trasparente	10 mm	2050 x 3050	12

Shockproof and weather resistant (-40°C/+120°C)
Resistente agli urti ed agli agenti atmosferici (-40°C/+120°C)
Antichoque y resistente a la intemperie (-40°C/+120°C)
Antichoc et résistant aux intempéries (-40°C/+120°C)
Anti-Stoß und witterungsbeständig (-40°C/+120°C)

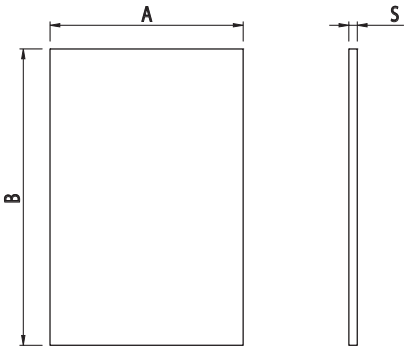

The reproduction of this catalogue is prohibited without authorization. We reserve the right to make changes to our products to enhance their features.

POLYCARBONATE PANEL
PANNELLO IN POLICARBONATO
PANEL DE POLICARBONATO
PANNEAU EN POLYCARBONATE
PLATTE AUS POLYCARBONAT

Cod	Color	S	AxB	Kg/m²
062LEX	Fumé	5 mm	2050 x 3050	6

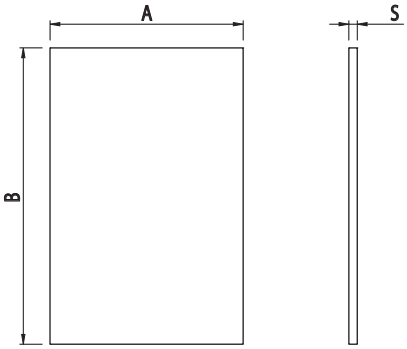

Shockproof and weather resistant (-40°C/+120°C)
Resistente agli urti ed agli agenti atmosferici (-40°C/+120°C)
Antichoque y resistente a la intemperie (-40°C/+120°C)
Antichoc et résistant aux intempéries (-40°C/+120°C)
Anti-Stoß und witterungsbeständig (-40°C/+120°C)

ALUMINIUM COMPOSITE PANEL
PANNELLO COMPOSITO IN ALLUMINIO
PANEL COMPUESTO DE ALUMINIO
PANNEAU COMPOSITE EN ALUMINIUM
SANDWICHPANEEL AUS ALUMINIUM

Cod	Color	S	AxB	Kg/m²
DILITE3	Argento	3 mm	1500 x 4050	3,50
DILITE4	Argento	4 mm	1500 x 4050	4,7

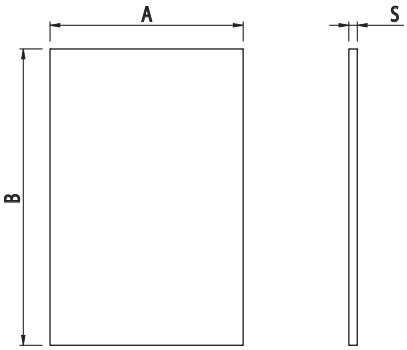

Aluminium and polythene
Alluminio e polietilene
Aluminio y polietileno
Aluminium et polyéthylène
Aluminium und Polyethylen

The reproduction of this catalogue is prohibited without authorization. We reserve the right to make changes to our products to enhance their features.

PVC FOAMBOARD PANEL
PANNELLO IN PVC ESPANSO
PANEL DE PVC EXPANDIDO
PANNEAU EN PVC EXPANSÉ
PLATTE AUS PVC-SCHAUM

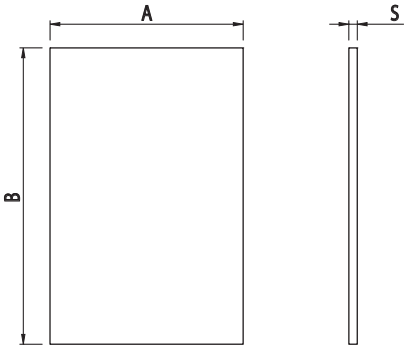

Cod	Color	S	AxB	Kg/m²
008VEKA103	Bianco	3 mm	2050 x 3050	2,10
008VEKA111	Azzurro	3 mm	2050 x 3050	2,10
008VEKA115	Nero	3 mm	2050 x 3050	2,10
008VEKA116	Nero	5 mm	2050 x 3050	3,50
008VEKA117	Bianco	5 mm	2050 x 3050	3,50
008VEKA119	Blu	5 mm	2050 x 3050	3,50

Shockproof, water- and acid-resistant, self-extinguishing
Resistente agli urti, all'acqua, agli acidi ed autoestinguente
Antichoque, resistente al agua, ácidos y autoextinguible
Antichoc, résistant à l'eau et aux acides, auto-éxtinguible
Anti-Stoß, wasserfest, säurebeständig und selbstverlöschend

LAMINATE PANEL
PANNELLO LAMITATO STRATIFICATO
PANEL LAMINADO ESTRATIFICADO
PANNEAU LAMINÉ STRATIFIÉ
LAMINIERTE SCHICHTPLATTE

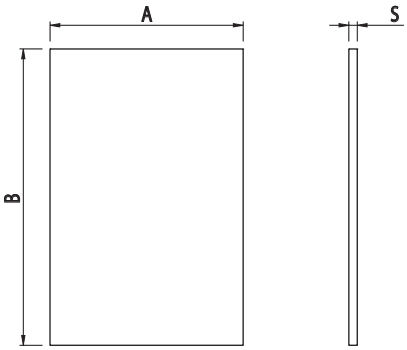

Cod	Color	S	AxB	Kg/m²
STR3MM	Bianco	3 mm	1300 x 3050	4,50
STR4MM	Bianco	4 mm	1300 x 3050	6
STR5MM	Bianco	5 mm	1300 x 3050	7,50

Shockproof and water resistant
Resistente agli urti ed all'acqua
Antichoque y resistente al agua
Antichoc et résistant à l'eau
Anti-Stoß und wasserfest

The reproduction of this catalogue is prohibited without authorization. We reserve the right to make changes to our products to enhance their features.

ELECTROWELDED MESH
RETE ELETTROSALDATA
MALLA ELECTROSOLDADA
GRILLE ÉLECTROSOUDÉE
BAUSTAHLGEWEBE

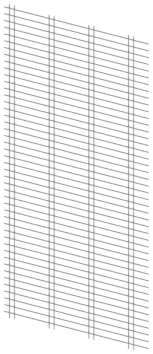

Cod	Color	S	AxB	Kg/m²
RETE 11X66	Grezzo	3 mm	1240 x 2400	4
RETE TEC 1003	Giallo RAL 1003	3 mm	1240 x 2400	4
RETE 11X66 INOX	Acciaio inox AISI 304	3 mm	1240 x 2400	4

Steel, 15x105x15 (stainless steel or powder coated)
Acciaio 15x105x15 (inox o verniciato a polvere)
Acero 15x105x15 (inoxidable o barnizado con pintura en polvo)
Acier 15x105x15 (inox ou peint à la poudre)
Stahl 15x105x15 (rostfrei oder pulverlackiert)

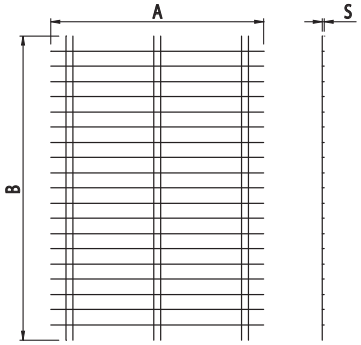

ELECTROWELDED MESH
RETE ELETTROSALDATA
MALLA ELECTROSOLDADA
GRILLE ÉLECTROSOUDÉE
BAUSTAHLGEWEBE

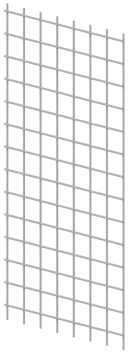

Cod	Color	S	AxB	Kg/m²
RETE 40X40X4	Grezzo	4 mm	1600 x 2000	4,50
670.001.000	Nero	4 mm	2000 x 1000	4,50

40x40 steel
Acciaio 40x40
Acero 40x40
Acier 40x40
Stahl 40x40

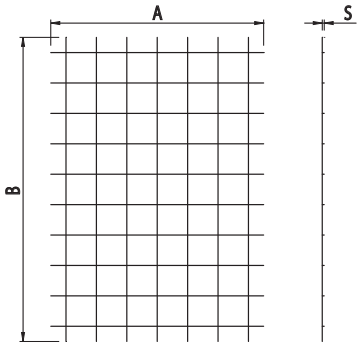

The reproduction of this catalogue is prohibited without authorization. We reserve the right to make changes to our products to enhance their features.

ALUMINIUM HINGE
CERNIERA IN ALLUMINIO
BISAGRA DE ALUMINIO
CHARNIÈRE EN ALUMINIUM
ALUMINIUMSCHARNIER

Cod	Note	g
084.503.001	Fastening with M5 UNI 5933 screws - Fissaggio con viti M5 UNI 5933 - Fijación con tornillos M5 UNI 5933 - Fixation avec vis M5 UNI 5933 - Befestigung mit M5 UNI 5933 Schrauben	49

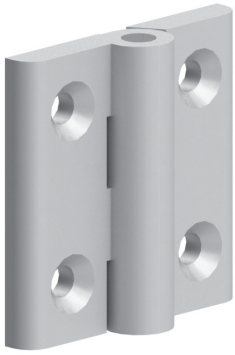

Anodised aluminium
Alluminio anodizzato
Aluminio anodizado
Aluminium anodisé
Eloxiertes Aluminium

AISI 303 stainless-steel pin, Ø6 mm
Perno acciaio inox AISI 303 Ø6
Perno de acero inoxidable AISI 303 Ø6
Pivot acier inox AISI 303 Ø 6
Bolzen aus rostfreiem Stahl AISI 303 Ø6

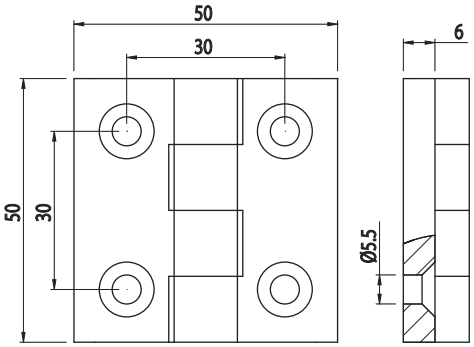

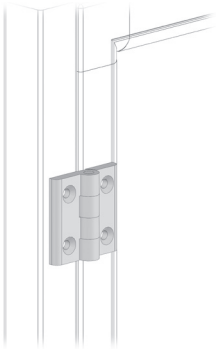

ALUMINIUM HINGE
CERNIERA IN ALLUMINIO
BISAGRA DE ALUMINIO
CHARNIÈRE EN ALUMINIUM
ALUMINIUMSCHARNIER

Cod	Note	g
013.100.027	M6X20 DIN 7984 - M6X20 DIN 7984 - M6X20 DIN 7984 - M6X20 DIN 7984 - M6X20 DIN 7984	97

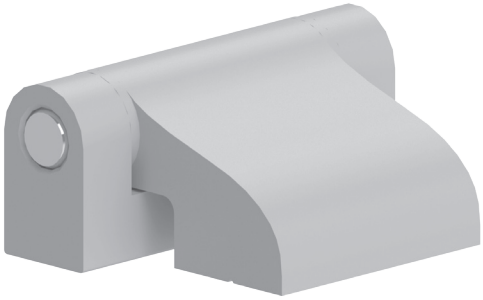

Anodised aluminium
Alluminio anodizzato
Aluminio anodizado
Aluminium anodisé
Eloxiertes Aluminium

AISI 303 stainless-steel pin, Ø8 mm
Perno acciaio inox AISI 303 Ø8
Perno de acero inoxidable AISI 303 Ø8
Pivot acier inox AISI 303 Ø8
Bolzen aus rostfreiem Stahl AISI 303 Ø8

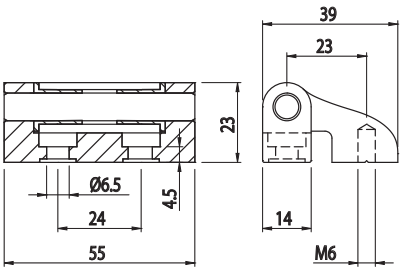

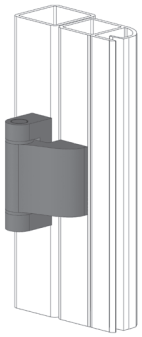

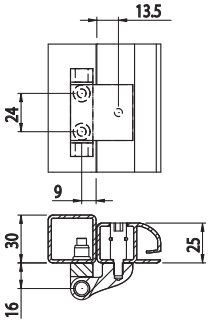

The reproduction of this catalogue is prohibited without authorization. We reserve the right to make changes to our products to enhance their features.

ALUMINIUM HINGE
CERNIERA IN ALLUMINIO
BISAGRA DE ALUMINIO
CHARNIÈRE EN ALUMINIUM
ALUMINIUMSCHARNIER

Cod	Note	g
013.100.028	M6X20 DIN 7984 - M6X20 DIN 7984 - M6X20 DIN 7984 - M6X20 DIN 7984 - M6X20 DIN 7984	124,5

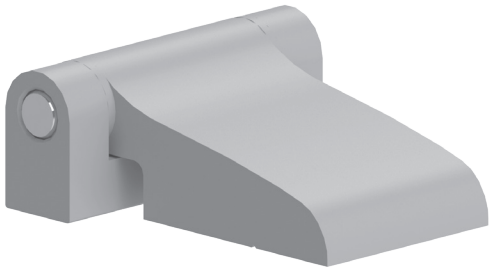

Anodised aluminium
Alluminio anodizzato
Aluminio anodizado
Aluminium anodisé
Eloxiertes Aluminium

AISI 303 stainless-steel pin, Ø8 mm
Perno acciaio inox AISI 303 Ø8
Perno de acero inoxidable AISI 303 Ø8
Pivot acier inox AISI 303 Ø8
Bolzen aus rostfreiem Stahl AISI 303 Ø8

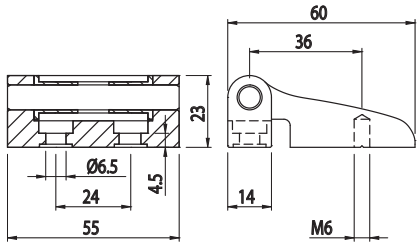

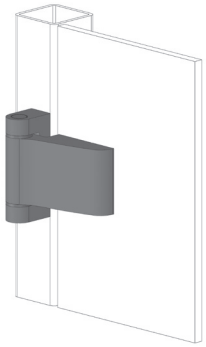

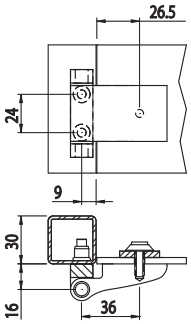

ALUMINIUM HINGE
CERNIERA IN ALLUMINIO
BISAGRA DE ALUMINIO
CHARNIÈRE EN ALUMINIUM
ALUMINIUMSCHARNIER

Cod	Note	g
084.500.012	M6x12 UNI 5933 screws not included - Viti M6x12 UNI 5933 non incluse - Tornillos M6x12 UNI 5933 no incluidos - Vis M6x12 UNI 5933 non fournies - Schrauben M6x12 UNI 5933 nicht inklusive	85

Anodised aluminium
Alluminio anodizzato
Aluminio anodizado
Aluminium anodisé
Eloxiertes Aluminium

AISI 303 stainless-steel pin, Ø8 mm
Perno acciaio inox AISI 303 Ø8
Perno de acero inoxidable AISI 303 Ø8
Pivot acier inox AISI 303 Ø8
Bolzen aus rostfreiem Stahl AISI 303 Ø8

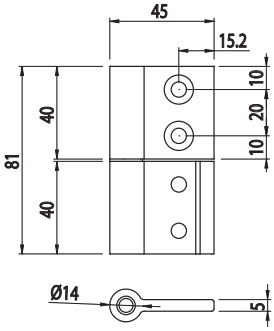

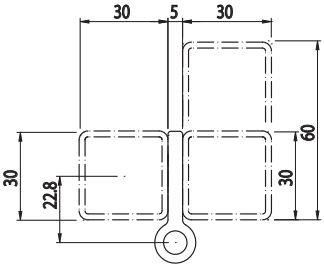

The reproduction of this catalogue is prohibited without authorization. We reserve the right to make changes to our products to enhance their features.

ALUMINIUM HINGE
CERNIERA IN ALLUMINIO
BISAGRA DE ALUMINIO
CHARNIÈRE EN ALUMINIUM
ALUMINIUMSCHARNIER

Cod	Note	Kg/m
0130.000.003A	Use with 013.100.021 and 013.100.029 - Usare con 013.100.021 e 013.100.029 - Utilizar con 013.100.021 y 013.100.029 - Utiliser avec 013.100.021 et 013.100.029 - Verwenden mit 013.100.021 und 013.100.029	1,35

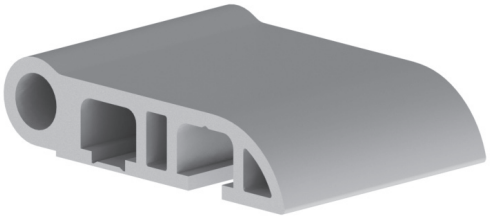

Anodised aluminium
Alluminio anodizzato
Aluminio anodizado
Aluminium anodisé
Eloxiertes Aluminium
L=6040 mm

Use with 013.100.021 and 013.100.029
Usare con 013.100.021 e 013.100.029
Utilizar con 013.100.021 y 013.100.029
Utiliser avec 013.100.021 et 013.100.029
Verwenden mit 013.100.021 und 013.100.029

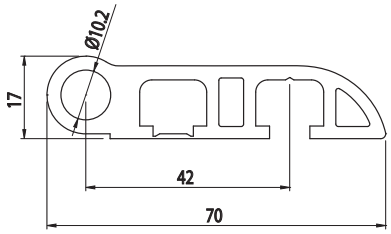

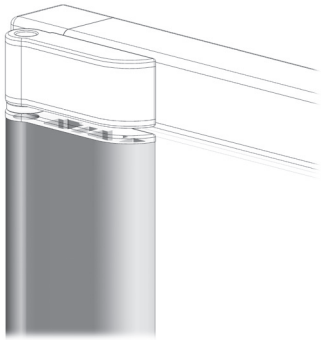

Cap - Tappo - Tapòn - Embout - Abdeck

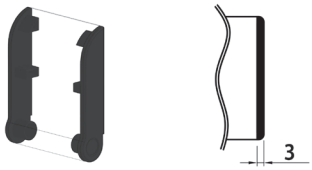

Cod	Mat	g	Col
013.000.003	PA6GF	9,4	■

COVER PROFILE
CHIUDICAVA MORBIDO
TAPA-RANURA
PROFILÉ DE RECOUVREMENT
ABDECKPROFIL

Cod	Note	g/m
084.203.001	50-100 m rolls - Rotoli 50-100 m - Rollos de 50-100 m - Rouleaux 50-100 m - Rollen 50-100 m	75

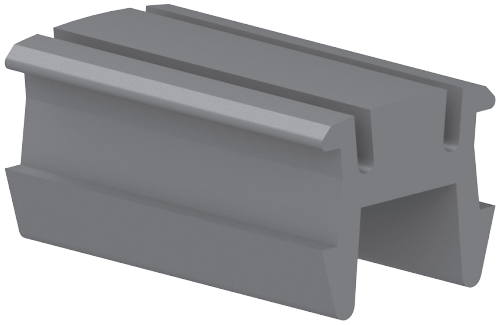

Soft black PVC
PVC morbido nero
PVC flexible color negro
PVC souple noir
Weich-PVC schwarz

Other colours on reqest
Altri colori a richiesta
Otros colores bajo solicitud
Autres couleurs sur demande
Weitere Farben auf Anfrage

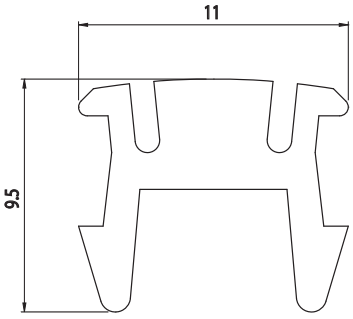

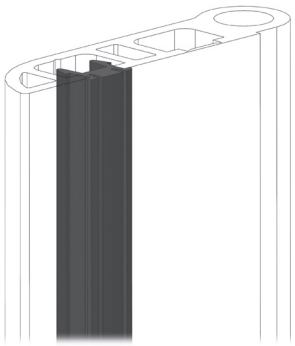

The reproduction of this catalogue is prohibited without authorization. We reserve the right to make changes to our products to enhance their features.

COVER PROFILE
CHIUDICAVA MORBIDO
TAPA-RANURA
PROFILÉ DE RECOUVREMENT
ABDECKPROFIL

Cod	Note	g/m
084.203.001G	50-100 m rolls - Rotoli 50-100 m - Rollos de 50-100 m - Rouleaux 50-100 m - Rollen 50-100 m	75

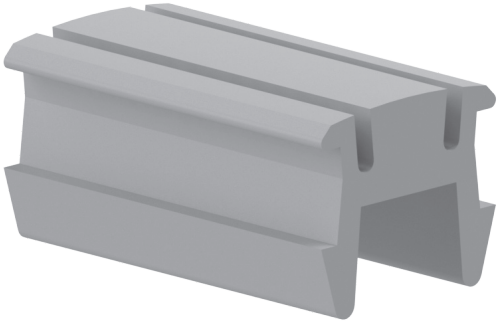

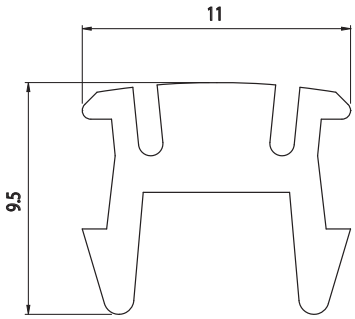

Soft grey PVC
PVC morbido grigio
PVC flexible color gris
PVC souple gris
Weich-PVC grau

Other colours on reqest
Altri colori a richiesta
Otros colores bajo solicitud
Autres couleurs sur demande
Weitere Farben auf Anfrage

The reproduction of this catalogue is prohibited without authorization. We reserve the right to make changes to our products to enhance their features.

HINGE SUPPORT
SUPPORTO CERNIERA
SOPORTE PARA BISAGRA
SUPPORT CHARNIÈRE
SCHARNIER HALTER

Cod	Note	g
013.100.035	-	48,7

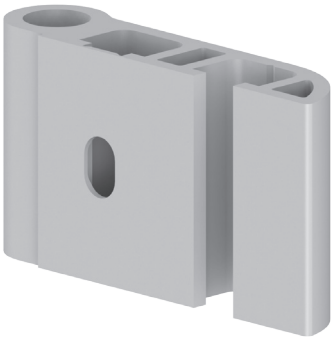

Anodised aluminium
Alluminio anodizzato
Aluminio anodizado
Aluminium anodisé
Eloxiertes Aluminium

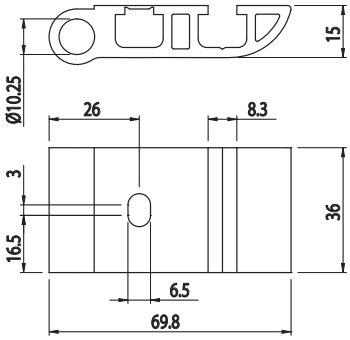

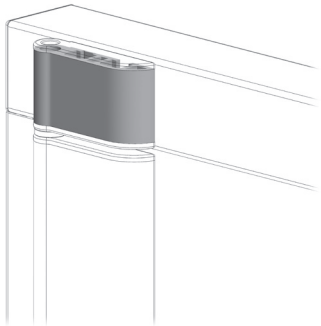

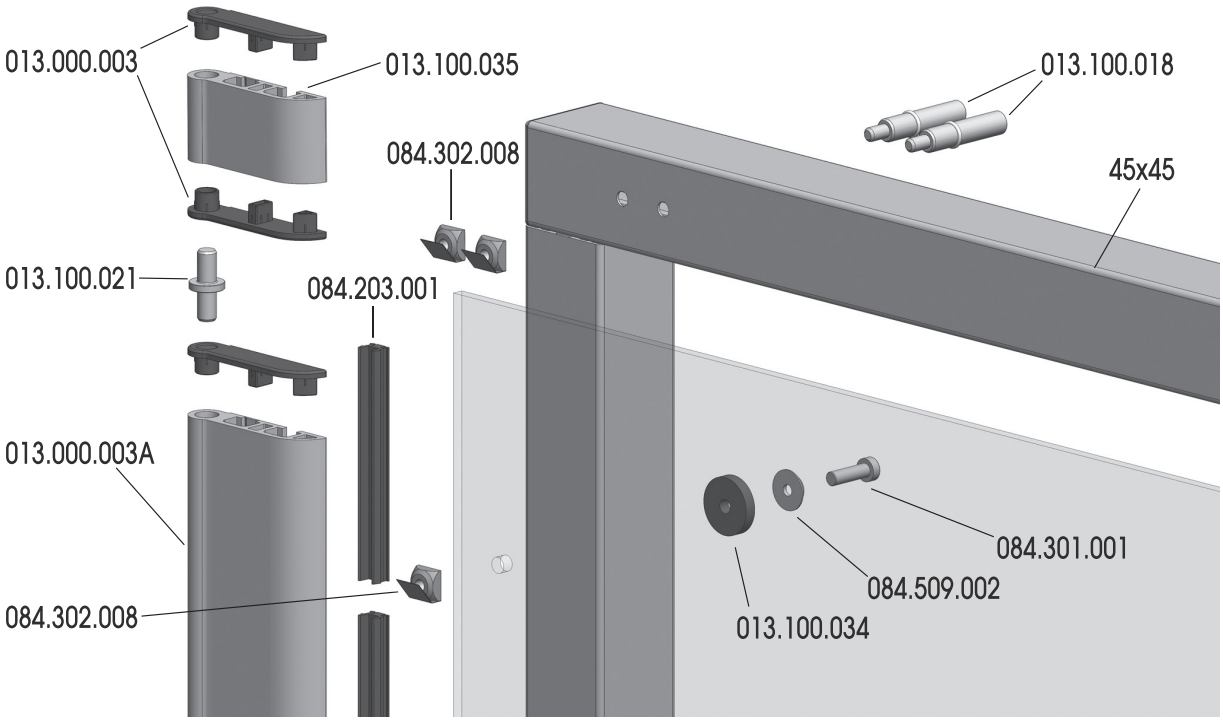

The reproduction of this catalogue is prohibited without authorization. We reserve the right to make changes to our products to enhance their features.

HINGE SUPPORT
SUPPORTO CERNIERA
SOPORTE PARA BISAGRA
SUPPORT CHARNIÈRE
SCHARNIER HALTER

Cod	Note	g
013.100.036	-	28,4

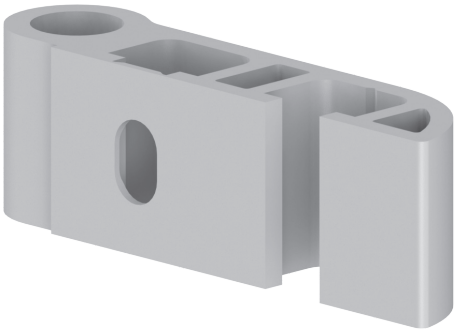

Anodised aluminium
Alluminio anodizzato
Aluminio anodizado
Aluminium anodisé
Eloxiertes Aluminium

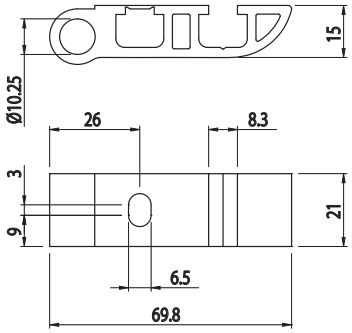

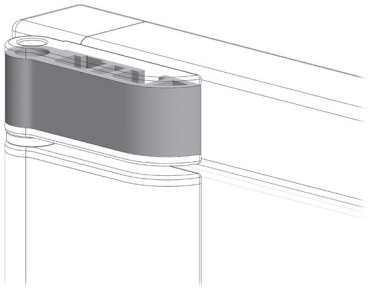

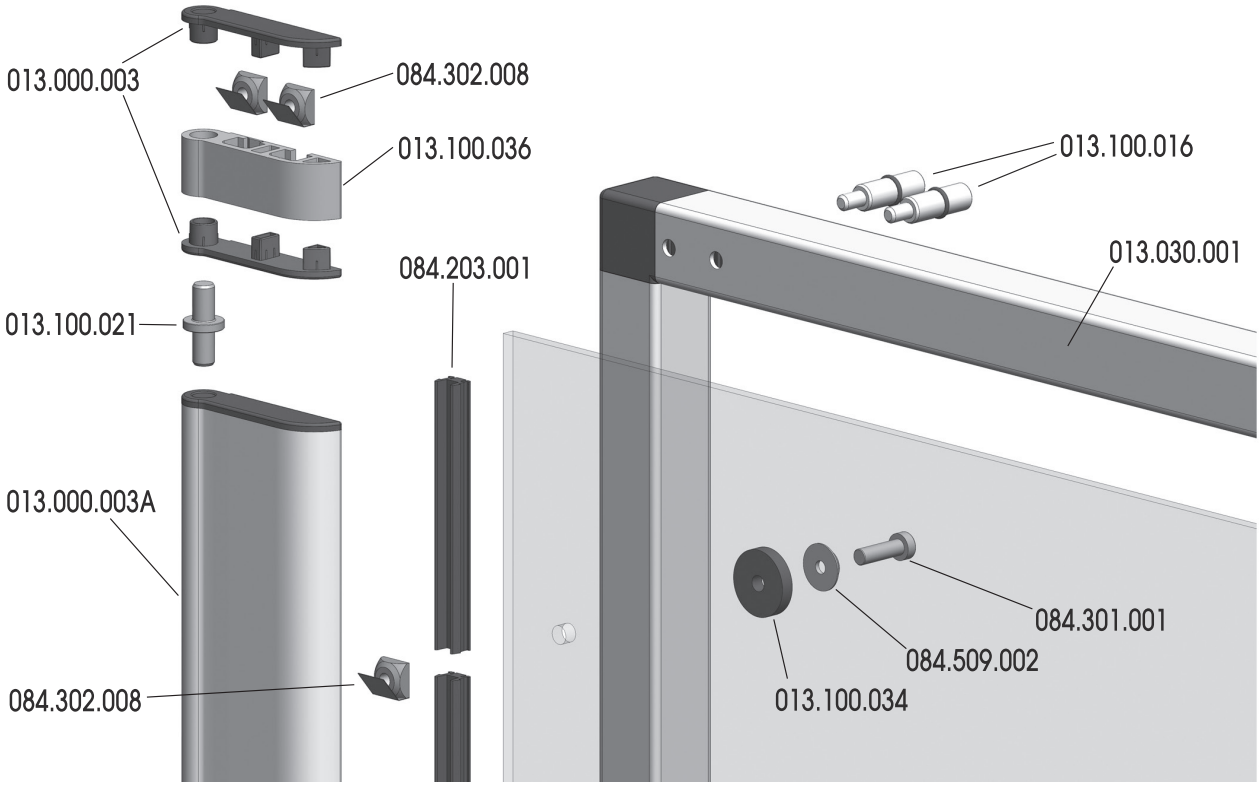

The reproduction of this catalogue is prohibited without authorization. We reserve the right to make changes to our products to enhance their features.

PIN FOR HINGE
PERNO PER CERNIERA
PERNO PARA BISAGRA
TIGE POUR CHARNIÈRE
GEWINDESTIFT FÜR SCHARNIER

Cod	Note	g
013.100.021	-	15

Zinc plated steel
Acciaio zincato
Acero galvanizado
Acier zingué
Verzinkter Stahl

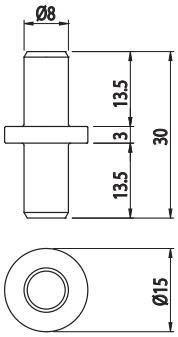

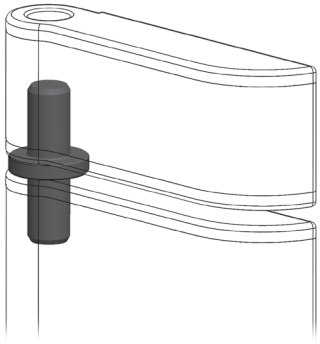

The reproduction of this catalogue is prohibited without authorization. We reserve the right to make changes to our products to enhance their features.

HINGE SUPPORT
SUPPORTO CERNIERA CENTRALE
SOPORTE BISAGRA
SUPPORT POUR CHARNIÈRE
SCHARNIER HALTER

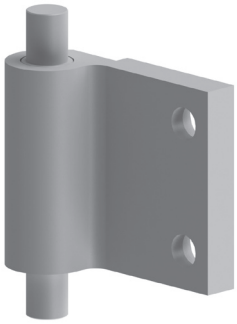

Cod	Note	g
013.100.029	Pin and grub screws included - Perno e grani inclusi - Perno y tornillos sin cabeza incluidos - Tige et vis sans tête fournis - Gewindestift und Stift im Lieferumfang enthalten	34,5

Anodised aluminium
Alluminio anodizzato
Aluminio anodizado
Aluminium anodisé
Eloxiertes Aluminium

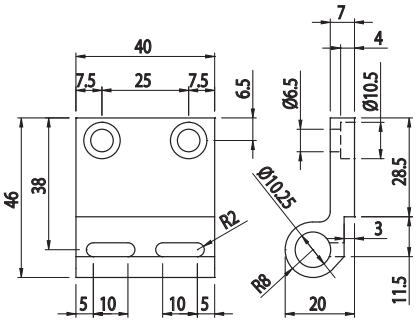

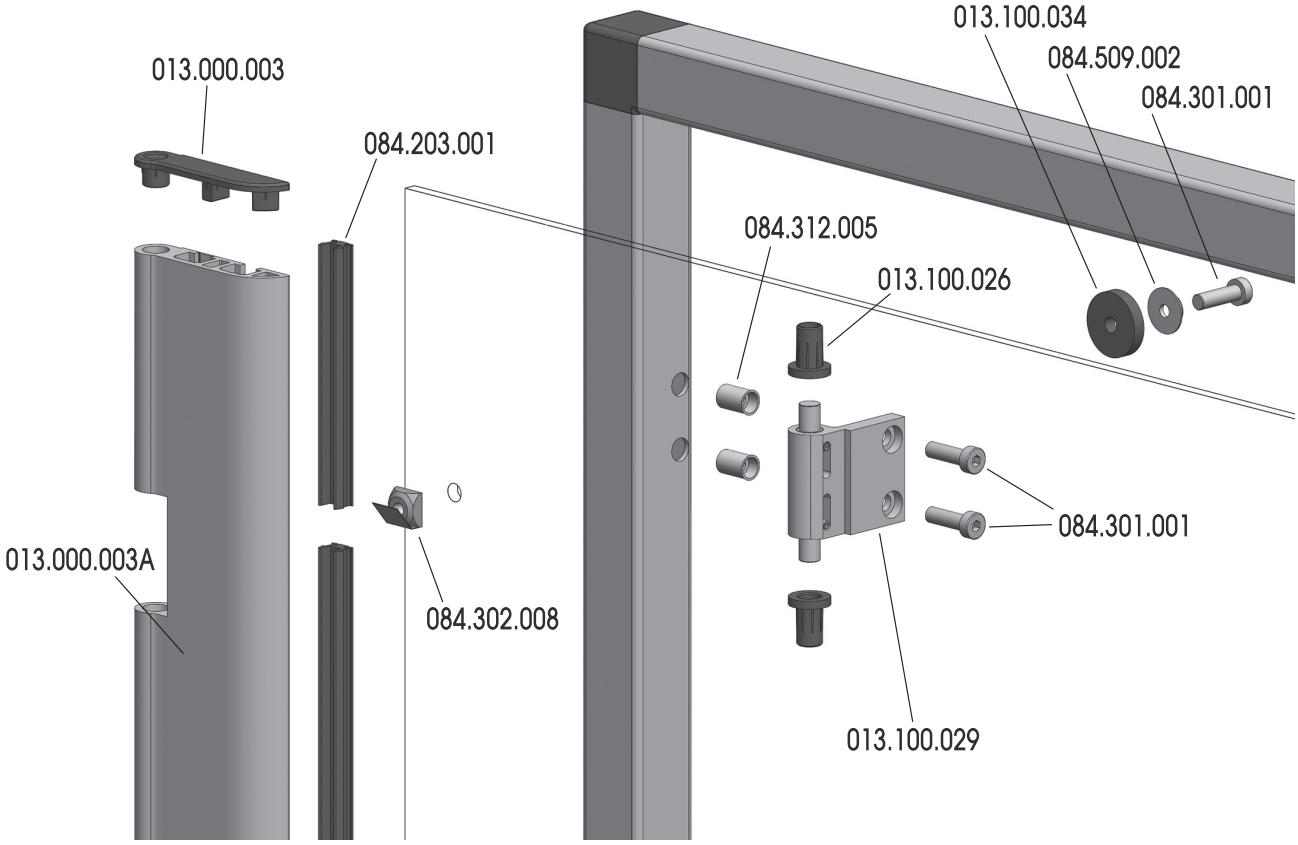

The reproduction of this catalogue is prohibited without authorization. We reserve the right to make changes to our products to enhance their features.

HINGE SUPPORT
SUPPORTO CERNIERA
SOPORTE PARA BISAGRA
SUPPORT CHARNIÈRE
SCHARNIER HALTER

Cod	Note	g
013.100.037	-	26

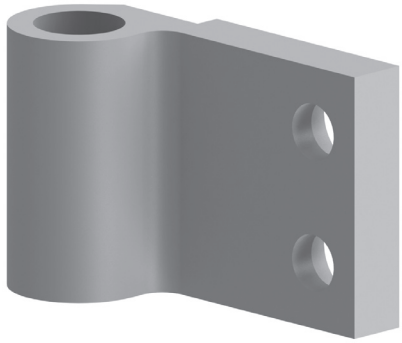

Anodised aluminium
Alluminio anodizzato
Aluminio anodizado
Aluminium anodisé
Eloxiertes Aluminium

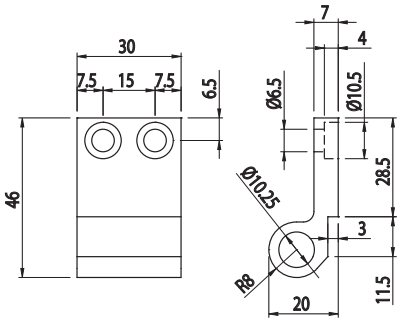

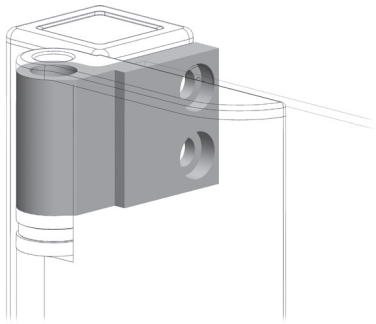

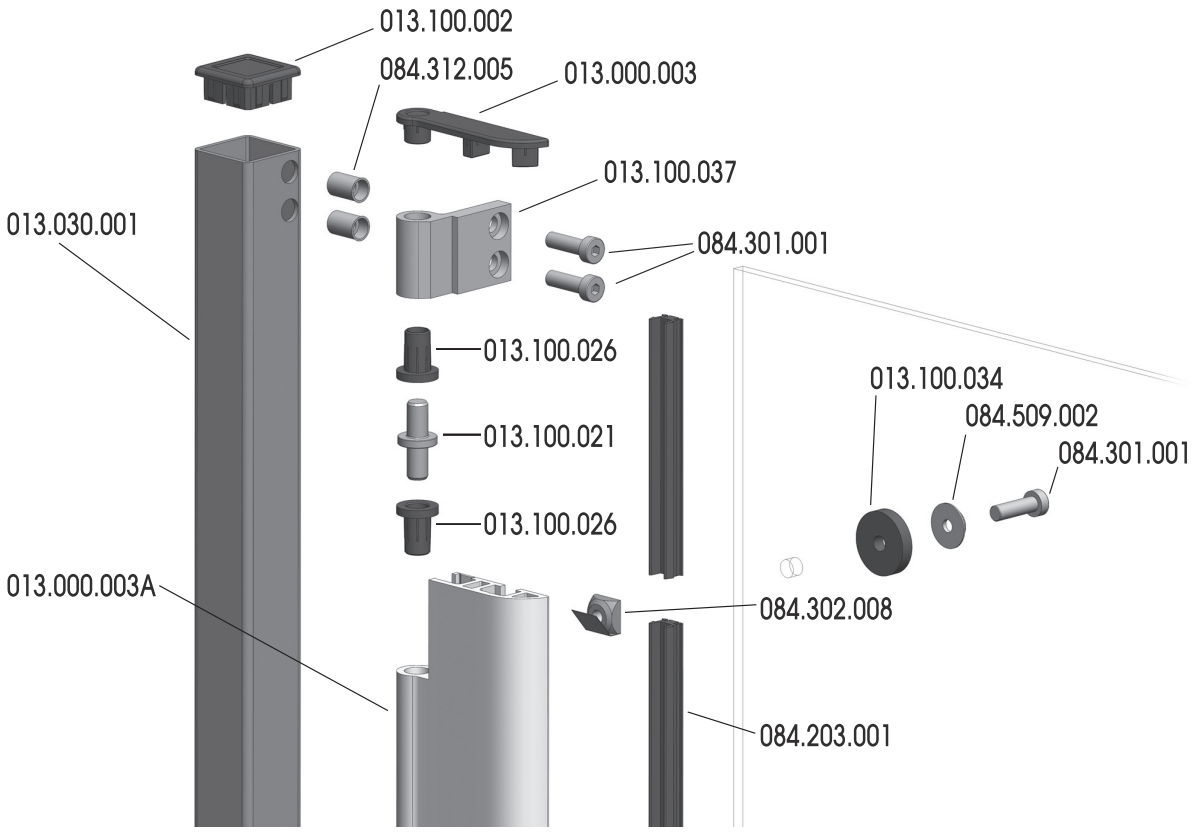

The reproduction of this catalogue is prohibited without authorization. We reserve the right to make changes to our products to enhance their features.

POLYAMIDE HINGE
CERNIERA IN POLIAMIDE
BISAGRA DE POLIAMIDA
CHARNIÈRE EN POLYAMIDE
POLYAMIDSCHARNIER

Cod	Note	g
084.501.008	M5x10 DIN 7984 screws not included - Viti M5x10 DIN 7984 non incluse - Tornillos M5x10 DIN 7984 no incluidos - Vis M5x10 DIN 7984 non fournies - Schrauben M5x10 DIN 7984 nicht inklusive	32

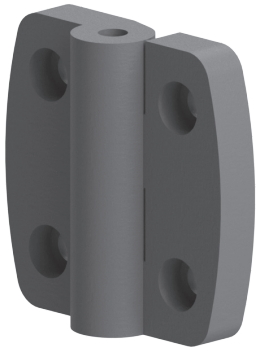

Black polyamide
Poliammide nero
Poliamida color negro
Polyamide noir
Schwarzes Polyamid

AISI 303 stainless-steel pin, Ø5 mm
Perno acciaio inox AISI 303 Ø5
Perno de acero inoxidable AISI 303 Ø5
Pivot acier inox AISI 303 Ø 5
Bolzen aus rostfreiem Stahl AISI 303 Ø5

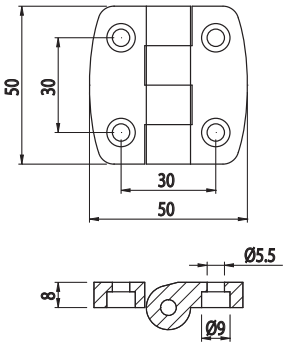

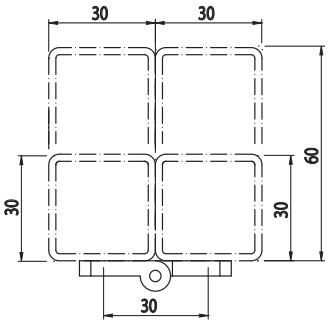

PIN FOR HINGE
PERNO PER CERNIERA
PERNO PARA BISAGRA
TIGE POUR CHARNIÈRE
GEWINDESTIFT FÜR SCHARNIER

Cod	Note	g
013.100.060	Use with 013.100.026 - Usare con 013.100.026 - Utilizar con 013.100.026 - Utiliser avec 013.100.026 - Verwenden mit 013.100.026	13,5

Zinc plated steel
Acciaio zincato
Acero galvanizado
Acier zingué
Verzinkter Stahl

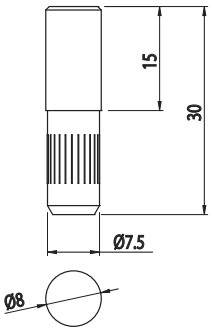

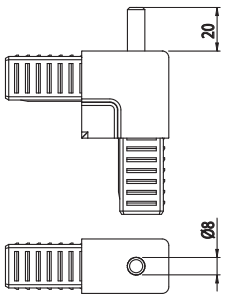

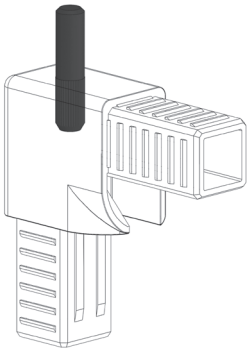

The reproduction of this catalogue is prohibited without authorization. We reserve the right to make changes to our products to enhance their features.

PIN FOR FOLDING DOORS
PERNO PER PORTE A SOFFIETTO
PERNO PARA PUERTAS CON FUELLE
PIVOT POUR PORTES À SOUFFLET
BOLZEN FÜR FALTTÜREN

Cod	Note	g
084.533.004	Sliding pin - Perno di strisciamento - Perno de arrastre - Pivot de glissement - Gleitzapfen	3

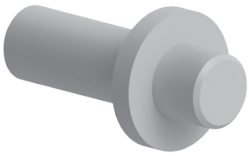

White PVC
PVC bianco
PVC color blanco
PVC blanc
PVC weiß

Examples pp. 284-287
Esempi pag. 284-287
Ejemplos pg. 284-287
Examples pg. 284-287
Beispiele S. 284-287

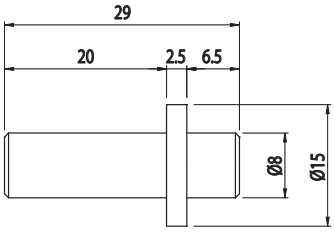

BUSHING FOR HINGE
BOCCOLA PER CERNIERA
CASQUILLO PARA BISAGRA
DOUILLE POUR CHARNIÈRE
BUCHSE FÜR SCHARNIER

Cod	Note	g
013.100.026	Use with 013.100.024 - Usare con 013.100.024 - Utilizar con 013.100.024 - Utiliser avec 013.100.024 - Verwenden mit 013.100.024	1

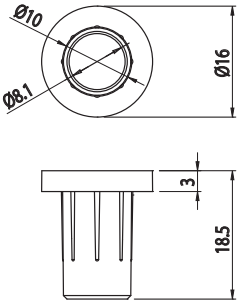

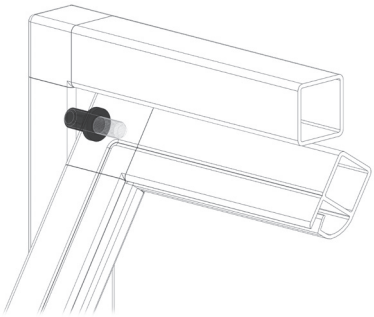

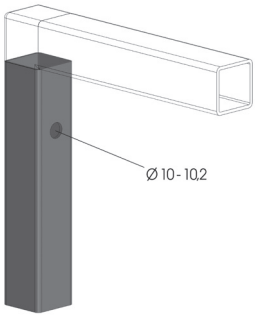

The reproduction of this catalogue is prohibited without authorization. We reserve the right to make changes to our products to enhance their features.

BUSHING FOR HINGE
BOCCOLA PER CERNIERA
CASQUILLO PARA BISAGRA
DOUILLE POUR CHARNIÈRE
BUCHSE FÜR SCHARNIER

Cod	Note	g
013.100.055	-	0,8

POM, RAL7023

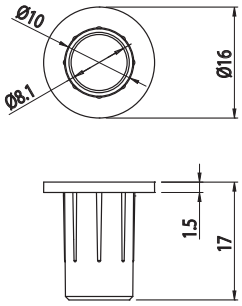

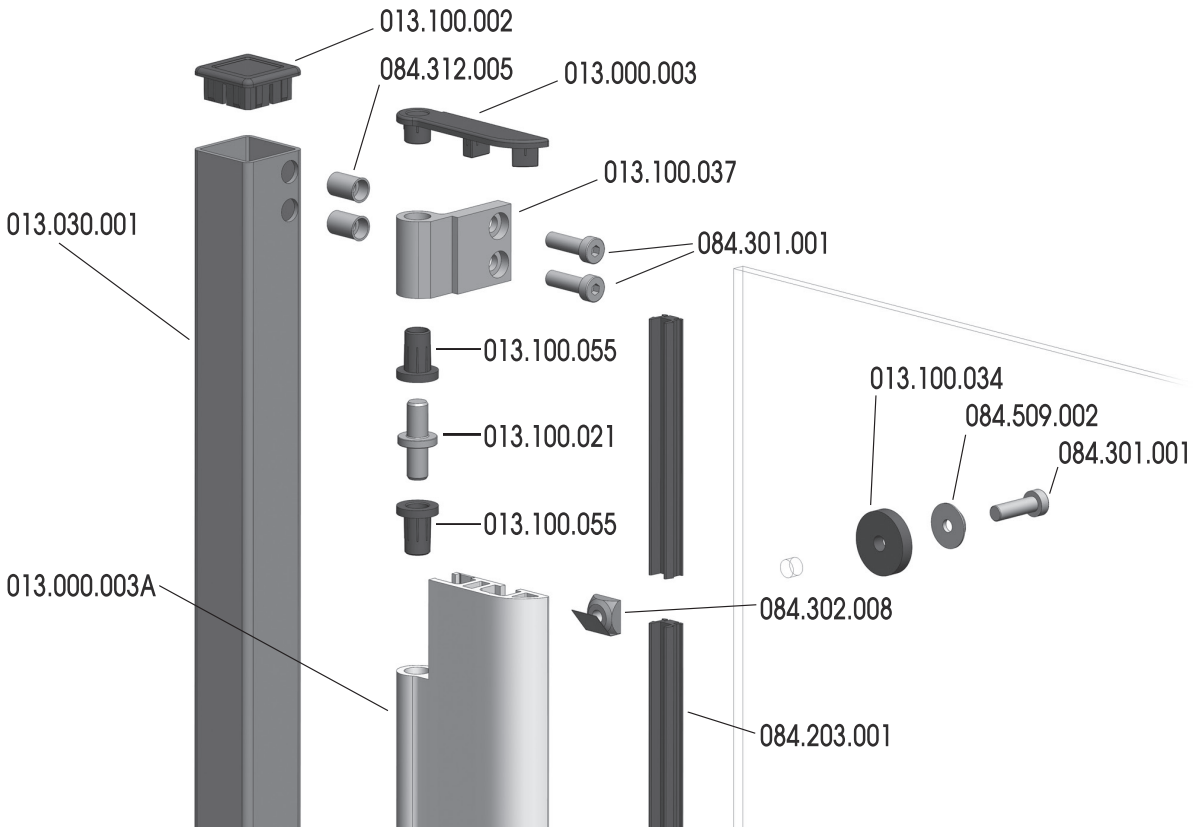

The reproduction of this catalogue is prohibited without authorization. We reserve the right to make changes to our products to enhance their features.

HANDLE
MANIGLIA
ASIDERO
POIGNÉE
GRIFF

Cod	Note	d	A	D	B	s	g
084.504.001	-	6,50	108	38	93	21	26

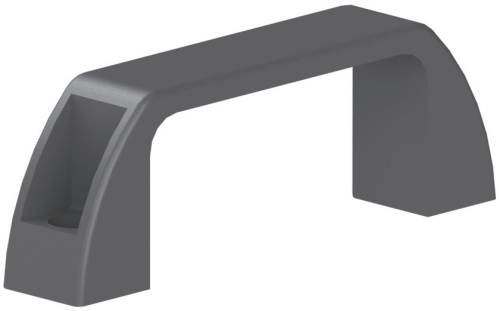

Black polyamide
Poliammide nero
Poliamida color negro
Polyamide noir
Polyamid schwarz

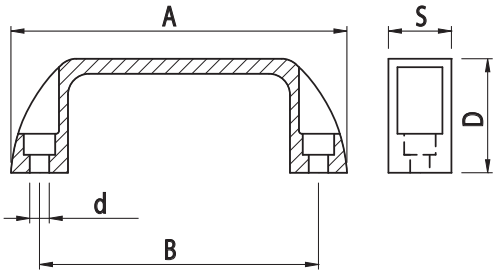

HANDLE
MANIGLIA
ASIDERO
POIGNÉE
GRIFF

Cod	Note	g
084.506.005A	■	46
084.506.005B	■	46
084.506.005N	■	46

Black polyamide
Poliammide nero
Poliamida color negro
Polyamide noir
Polyamid schwarz

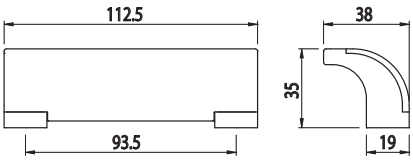

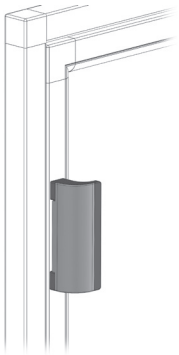

The reproduction of this catalogue is prohibited without authorization. We reserve the right to make changes to our products to enhance their features.

HANDLE
MANIGLIA
ASIDERO
POIGNÉE
GRIFF

Cod	Note	g
013.506.008	Inclined handle - Maniglia inclinata - Asidero inclinado - Poignée inclinée - Geneigter Griff	47,1

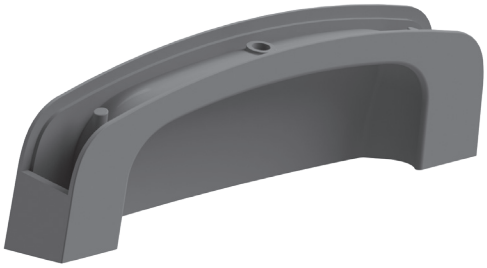

PA6+GF, RAL 7023

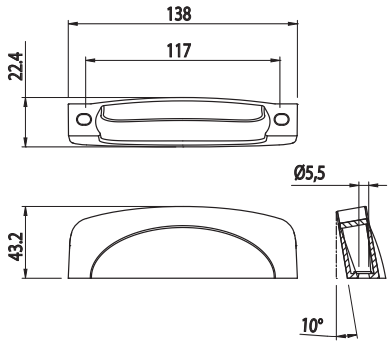

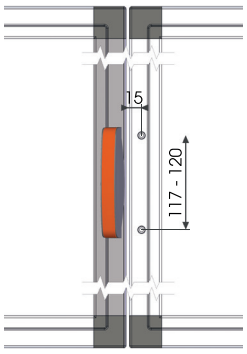

Cap - Tappo - Tapòn - Embout - Abdeck

Cod	Mat	g	Col
013.506.010A	PA6GF	10	■
013.506.010G	PA6GF	10	■

HANDLE
MANIGLIA
ASIDERO
POIGNÉE
GRIFF

Cod	Note	g
013.506.009	Inclined handle - Maniglia inclinata - Asidero inclinado - Poignée inclinée - Geneigter Griff	42,6

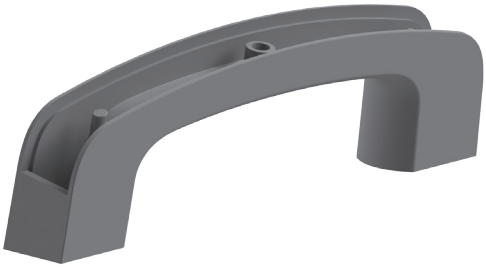

PA6+GF, RAL 7023

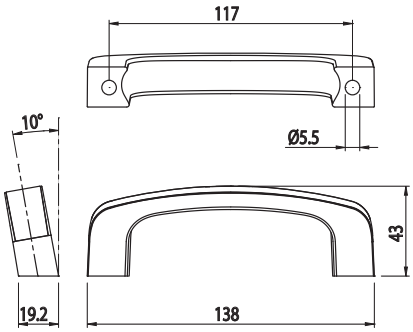

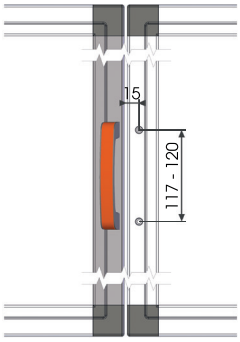

Cap - Tappo - Tapòn - Embout - Abdeck

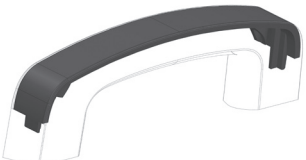

Cod	Mat	g	Col
013.506.010A	PA6GF	10	■
013.506.010G	PA6GF	10	■

The reproduction of this catalogue is prohibited without authorization. We reserve the right to make changes to our products to enhance their features.

HANDLE
MANIGLIA
ASIDERO
POIGNÉE
GRIFF

Cod	Note	g
084.506.008	Open - Aperta - Abierta - Ouverte - Offen	25

RAL 7023 polyamide
Poliammide RAL 7023
Poliamida color RAL 7023
Polyamide RAL 7023
Polyamid RAL 7023

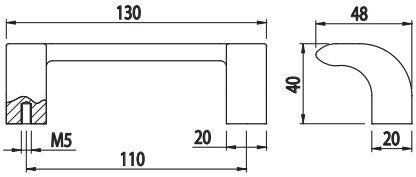

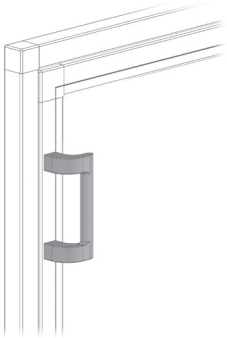

SPRING HANDLE
MANIGLIA A MOLLA
ASIDERO DE RESORTE
POIGNÉE À RESSORT
GRIFF MIT FEDER

Cod	Note	g
013.506.003	Suitable for sliding doors closing - Adatta all'aggancio di sportelli scorrevoli - Apta para el enganche de puertas corredizas - Adaptée à la fixation de volets coulissants - Zum Schließen von Schiebetüren geeignet	185

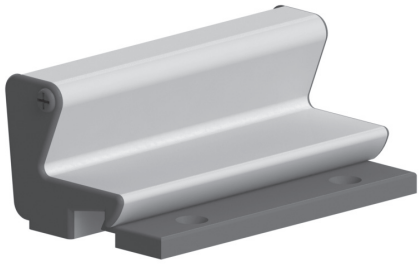

Anodised aluminium
Alluminio anodizzato
Aluminio anodizado
Aluminium anodisé
Eloxiertes Aluminium

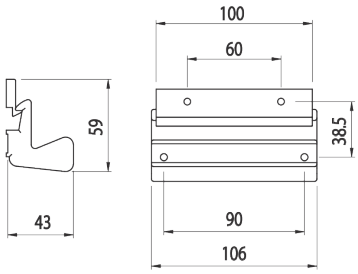

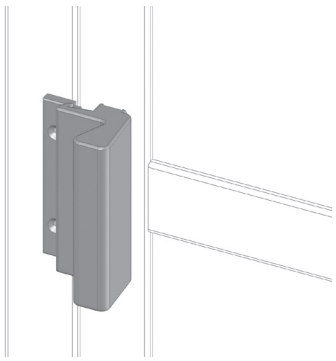

The reproduction of this catalogue is prohibited without authorization. We reserve the right to make changes to our products to enhance their features.

HANDLE
MANIGLIA
ASIDERO
POIGNÉE
GRIFF

Cod	Note	g/m
013.506.004	Aluminium handle - Maniglia in alluminio - Asidero de aluminio - Poignée en aluminium - Griss aus Aluminium	830

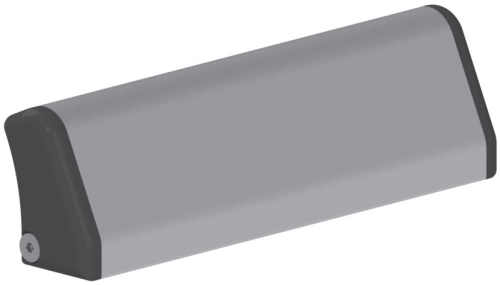

Anodised aluminium and RAL 7023 polyamide
Alluminio anodizzato e poliammide RAL 7023
Aluminio anodizado y poliamida RAL 7023
Aluminium anodisé et polyamide RAL 7023
Eloxiertes Aluminium und Polyamid RAL 7023

Natural colour
Colore naturale
Color natural
Couleur naturelle
Natürliche Farbe

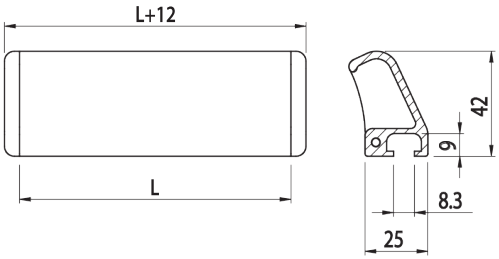

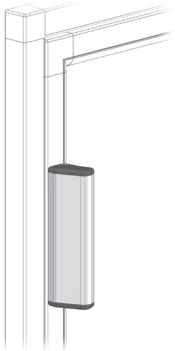

CODICE PER ORDINE
CODE FOR ORDER / CÓDIGO POR PEDIDO
CODE POUR COMMANDE / CODE ZUR BESTELLUNG

013.506.004 □ □ □ □

L lunghezza profilo (mm)
L profile length (mm)
L longitud del perfil (mm)
L longueur du profilé(mm)
L Profillänge (mm)

The reproduction of this catalogue is prohibited without authorization. We reserve the right to make changes to our products to enhance their features.

HANDLE PROFILE
PROFILO MANIGLIA
PERFILE MANIJA
PROFIL DE POIGNÉE
GRIFFPROFIL

Cod	Note	g/m
084.506.004P	For caps 084.506.004T - Per tappi 084.506.004T - Para tapas 084.506.004T - Pour embouts 084.506.004T - Für Abdeckkappen 084.506.004T	830

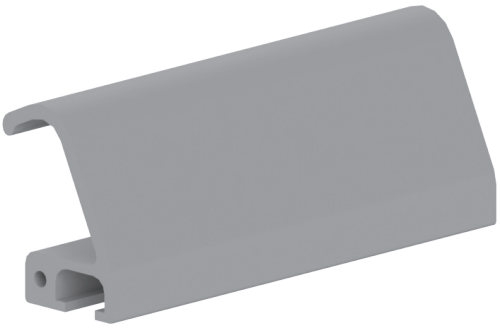

Anodised aluminium
Alluminio anodizzato
Aluminio anodizado
Aluminium anodisé
Eloxiertes Aluminium
L=6040 mm

Natural colour
Colore naturale
Color natural
Couleur naturelle
Natürliche Farbe

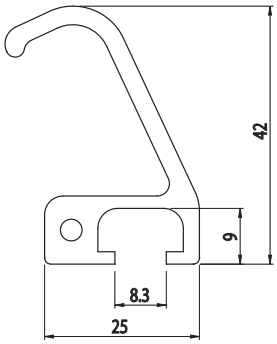

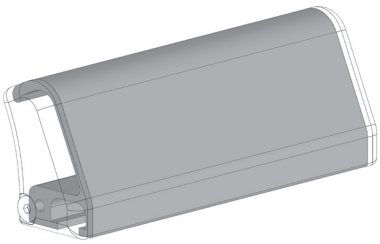

HANDLE CAPS
TAPPI MANIGLIA
TAPAS MANEJAR
EMBOUTS POIGNÉE
ABDECKKAPPEN FÜR GRIFF

Cod	Note	g
013.506.004T	Pair of caps for profile - Coppia tappi per profilo - Par de tapas para perfil - Paire de bouchons pour profilé - Paar Kappen für Profil	20

RAL 7023 polyamide
Poliammide RAL 7023
Poliamida color RAL 7023
Polyamide RAL 7023
Polyamid RAL 7023

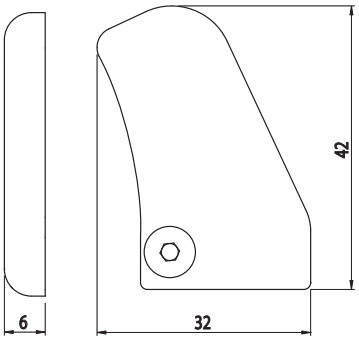

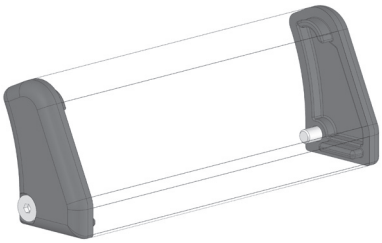

The reproduction of this catalogue is prohibited without authorization. We reserve the right to make changes to our products to enhance their features.

TUBULAR HANDLE
MANIGLIA A TUBO
ASIDERO DE TUBO
POIGNÉE À TUBE
ROHRGRIFF

Cod	Note	g
013.506.007	Ø 15 anodised tube - Tubo anodizzato Ø 15 - Tubo anodizado Ø 15 - Tube anodisé Ø 15 - Eloxiertes Rohr Ø 15	57

Anodised aluminium and PA6+GF RAL 7023
Alluminio anodizzato e PA6+GF RAL 7023
Aluminio anodizado y PA6+GF RAL 7023
Aluminiun anodisé et PA6+GF RAL 7023
Eloxiertes Aluminium und PA6+GF RAL 7023

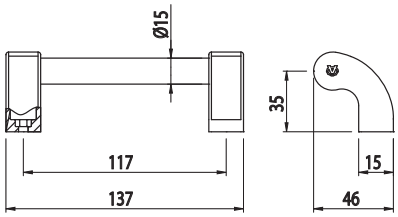

The reproduction of this catalogue is prohibited without authorization. We reserve the right to make changes to our products to enhance their features.

SUPPORTS FOR HANDLE
SUPPORTI PER MANIGLIA
SOPORTES PARA ASIDERO
SUPPORTS POUR POIGNÉE
HALTERUNG FÜR GRIFF

Cod	Note	g
013.506.006	For Ø32 tube - Per tubo Ø32 - Para tubo Ø32 - Pour tube Ø32 - Für Rohr Ø32	93

PA6+GF, RAL 7023

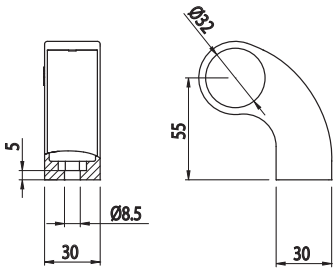

CODICE PER ORDINE KIT MANIGLIA COMPLETA
CODE FOR ORDER COMPLETE HANDLE KIT / CÓDIGO PARA PEDIR EL KIT DE ASIDERO COMPLETO
CODE POUR COMMANDE KIT POIGNÉE COMPLÈTE / CODE ZUR BESTELLUNG DES KOMPLETTEN GRIFFSATZ

013.506.006 ☐ ☐ ☐ ☐

maniglia completa di tubo in alluminio ø32
handle complete with aluminium tube Ø32
manija con tubo en aluminio Ø32
poignée avec tube en aluminium Ø32
Griff mit Aluminium Rohr Ø32

l interasse tra i due supporti
l distance between the two supports
l distancia entre los dos soportes
l distance entre les deux supports
l Abstand zwischen den zwei Halter

tubo / tube / tubo / tube / Rohr
A anodizzato / anodized / anodizado / anodisé / eloxiert
B verniciato blu / blu coated / pintado azul / peint en bleu / Blau lackiert
R gommato / rubberised / cauchutado / caoutchouté / gummiert

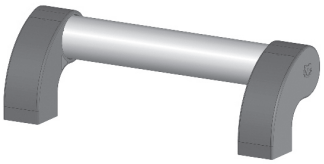

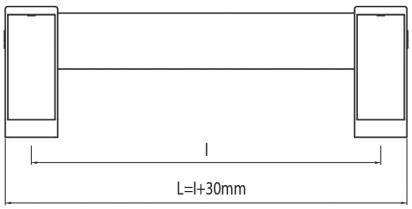

tubo / tube / tubo / tube / Rohr = l+25mm

The reproduction of this catalogue is prohibited without authorization. We reserve the right to make changes to our products to enhance their features.

TUBE FOR HANDLE
TUBO PER MANIGLIA
TUBO PARA ASIDERO
TUBE POUR POIGNÉE
ROHR FÜR GRIFF

Cod	Note	Kg/m
084.506.006PA	Ø32 mm	0,35

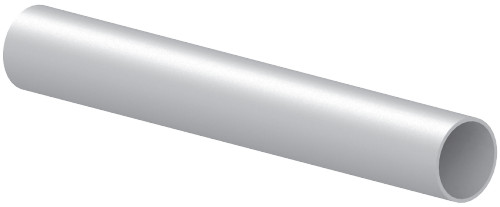

Anodised aluminium
Alluminio anodizzato
Aluminio anodizado
Aluminium anodisé
Eloxiertes Aluminium
L=6040 mm

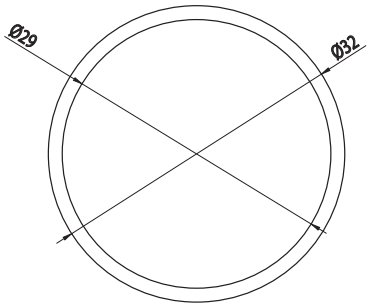

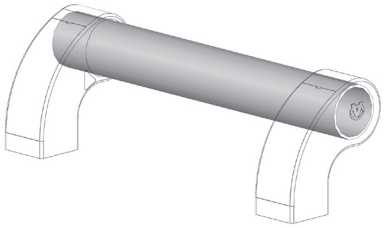

SUPPORTS FOR HANDLE
SUPPORTI PER MANIGLIA
SOPORTES PARA ASIDERO
SUPPORTS POUR POIGNÉE
HALTERUNG FÜR GRIFF

Cod	Note	g
084.506.009A	For Ø25 tube - Per tubo Ø25 - Para tubo Ø25 - Pour tube Ø25 - Für Rohr Ø25	9,6

PA6+GF, RAL 7023

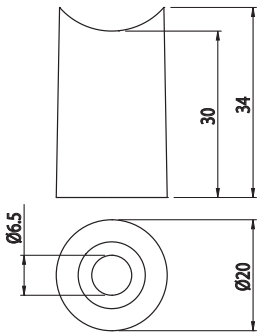

The reproduction of this catalogue is prohibited without authorization. We reserve the right to make changes to our products to enhance their features.

HANDLE CAPS
TAPPI MANIGLIA
TAPAS MANEJAR
EMBOUTS POIGNÉE
ABDECKKAPPEN FÜR GRIFF

Cod	Note	g
084.506.009B	For Ø25 tube - Per tubo Ø25 - Para tubo Ø25 - Pour tube Ø25 - Für Rohr Ø25	4,7

PA6+GF, RAL 7023

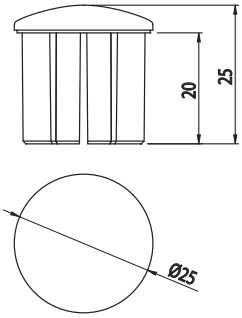

TUBE FOR HANDLE
TUBO PER MANIGLIA
TUBO PARA ASIDERO
TUBE POUR POIGNÉE
ROHR FÜR GRIFF

Cod	Note	Kg/m
084.506.009PA	Ø25 mm	0,3

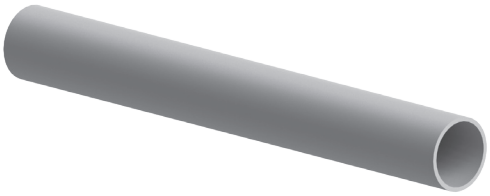

Anodised aluminium
Alluminio anodizzato
Aluminio anodizado
Aluminium anodisé
Eloxiertes Aluminium
L=6040 mm

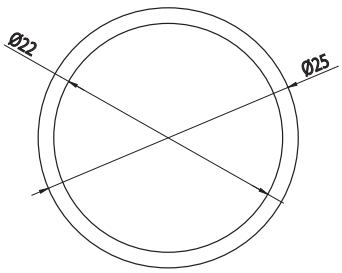

The reproduction of this catalogue is prohibited without authorization. We reserve the right to make changes to our products to enhance their features.

CREMONE BOLT
MANIGLIA CREMONESE
CREMONA
CRÉMONE
BASKÜLEVERSCHLUSS

Cod	Note	g
013.100.056	For outward and inward opening - Per apertura interna ed esterna - Para apertura exterior y interior - Pour ouverture extérieure et intérieure - Für Innen- und Außen Öffnung	238

Aluminium
Alluminio
Aluminio
Aluminium
Aluminium

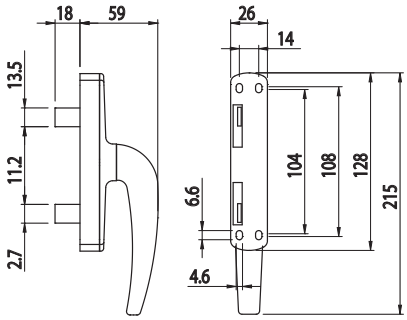

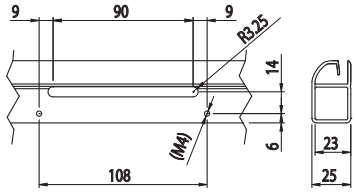

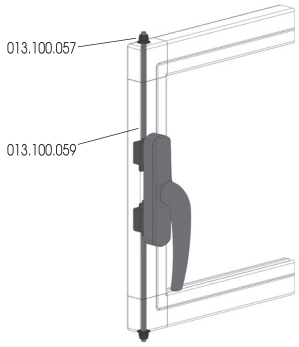

BUSHING FOR ROD
BOCCOLA PER ASTA
CASQUILLO PARA BARRA
DOUILLE POUR BARRE
BUCHSE FÜR STAB

Cod	Note	g
013.100.057	Ø6, for 013.100.059 - Ø6, per 013.100.059 - Ø6, para 013.100.059 - Ø6, pour 013.100.059 - Ø6, für 013.100.059	0,7

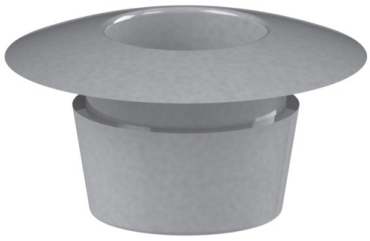

PA6

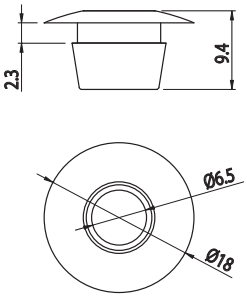

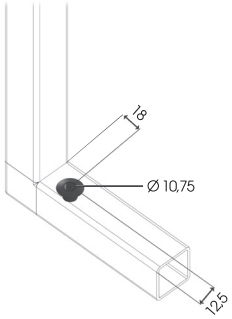

The reproduction of this catalogue is prohibited without authorization. We reserve the right to make changes to our products to enhance their features.

BLOCK FOR ROD
BLOCCHETTO PER ASTA
BLOQUE PARA BARRA
BLOC POUR BARRE
BLOCK FÜR STAB

Cod	Note	g
013.100.058	For 013.100.059 - Per 013.100.059 - Para 013.100.059 - Pour 013.100.059 - Für 013.100.059	7

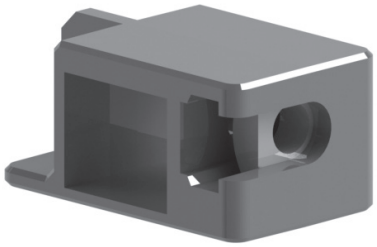

PA6

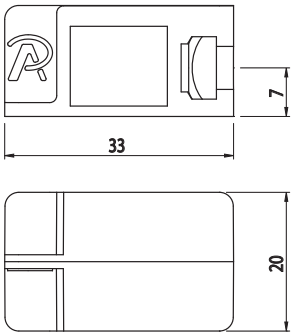

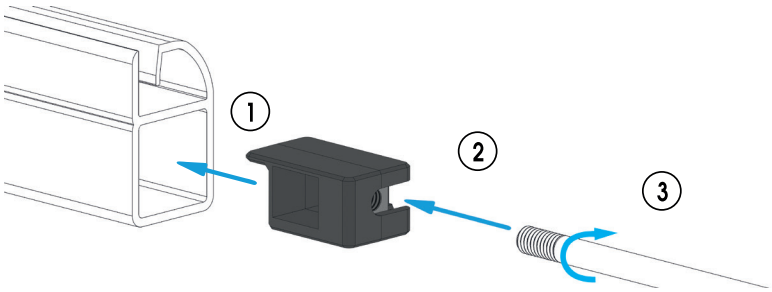

ROD
ASTA
BARRA
BARRE
STAB

Cod	Note	g
013.100.059	Ø6	305,5

Aluminium
Alluminio
Aluminio
Aluminium
Aluminium
L=6000 mm

Thread and chamfer the bar
Filettare e smussare la barra
Roscar y achaflanar la barra
Fileter et chanfreiner la barre
Das Gewinde am Stab herstellen und fasen

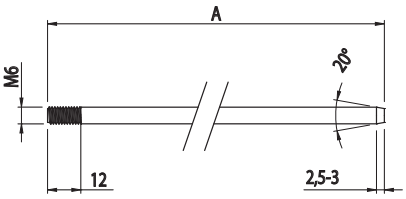

$$A = (L/2) - 43$$

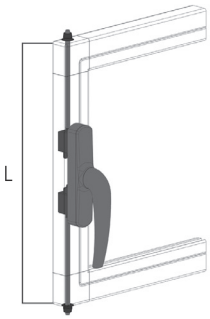

The reproduction of this catalogue is prohibited without authorization. We reserve the right to make changes to our products to enhance their features.

SPRING CATCH
MOSCHETTONE
MOSQUETÓN
MOUSQUETON
KARABINER

NEW

Cod	Note	g
013.100.071	Snap hook for snap closure / Moschettone per chiusura a scatto / Mosquetón para cierre a presión / Mousqueton pour fermeture à pression / Karabiner für den Schnappverschluss	21

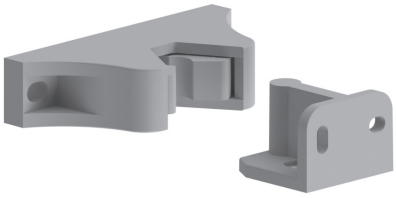

PA6+GF RAL 7023

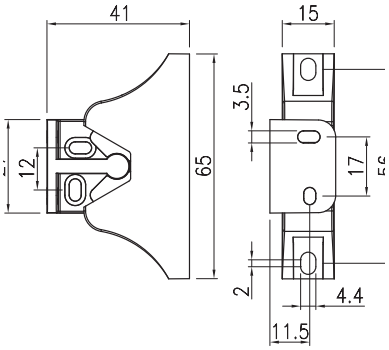

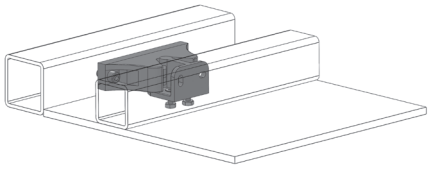

HATCH STOP
FERMO PORTELLONE
RETÉN DE COMPUERTA
BUTÉE DE PORTE
FESTSTELLER TOR

Cod	Note	g
013.100.003	Hatch stop - Fermo portellone - Retén de compuerta - Butée de porte - Feststeller Tor	20

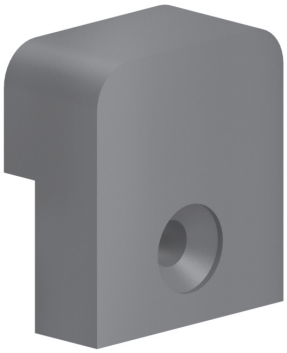

RAL 7023 polyamide
Poliammide RAL 7023
Poliamida color RAL 7023
Polyamide RAL 7023
Polyamid RAL 7023

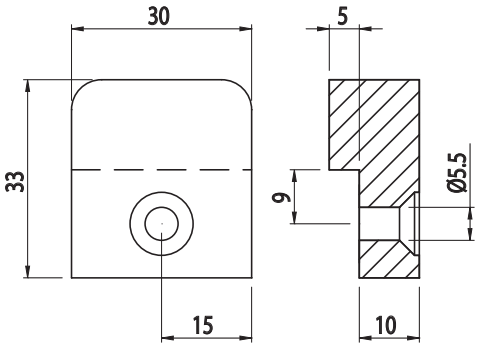

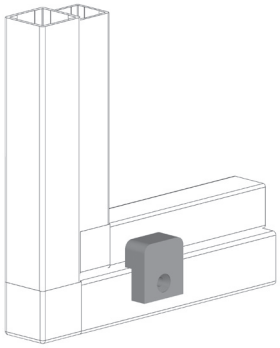

The reproduction of this catalogue is prohibited without authorization. We reserve the right to make changes to our products to enhance their features.

SNAP CLOSURE
CHIUSURA A SCATTO
CIERRE DE TRINQUETE
FERMETURE À DÉCLIC
SCHNAPPVERSCHLUSS

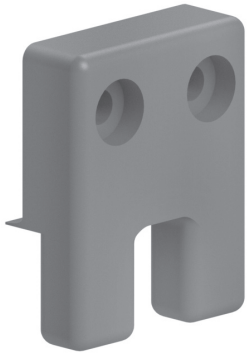

Cod	Note	g
013.100.004	For use with 013.100.005 - Da usare con 013.100.005 - Para usar con 013.100.005 - À utiliser avec 013.100.005 - Mit 013.100.005 zu verwenden	20

RAL 7023 polyamide
Poliammide RAL 7023
Poliamida color RAL 7023
Polyamide RAL 7023
Polyamid RAL 7023

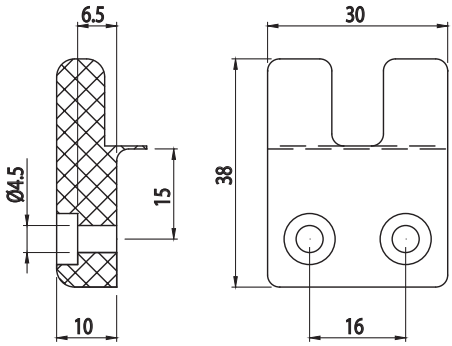

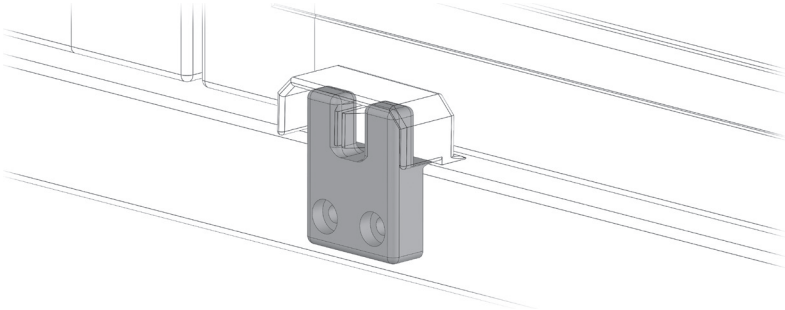

SNAP CLOSURE
CHIUSURA A SCATTO
CIERRE DE TRINQUETE
FERMETURE À DÉCLIC
SCHNAPPVERSCHLUSS

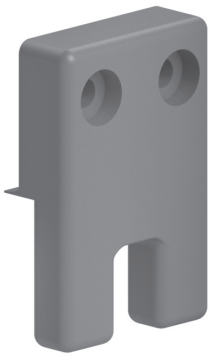

Cod	Note	g
013.100.006	For use with 013.100.005 - Da usare con 013.100.005 - Para usar con 013.100.005 - À utiliser avec 013.100.005 - Mit 013.100.005 zu verwenden	25

RAL 7023 polyamide
Poliammide RAL 7023
Poliamida color RAL 7023
Polyamide RAL 7023
Polyamid RAL 7023

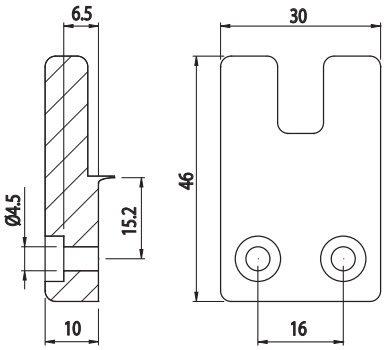

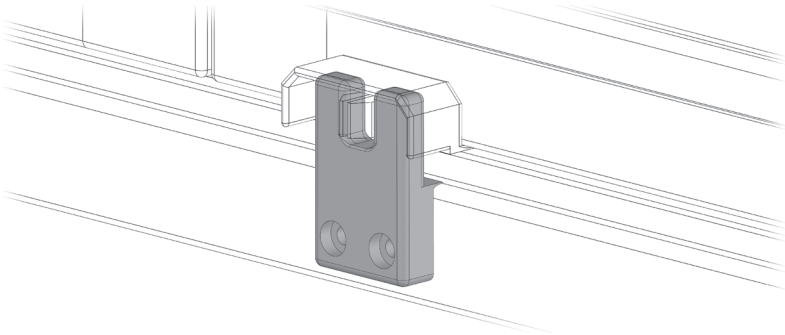

The reproduction of this catalogue is prohibited without authorization. We reserve the right to make changes to our products to enhance their features.

SNAP CLOSURE
CHIUSURA A SCATTO
CIERRE DE TRINQUETE
FERMETURE À DÉCLIC
SCHNAPPVERSCHLUSS

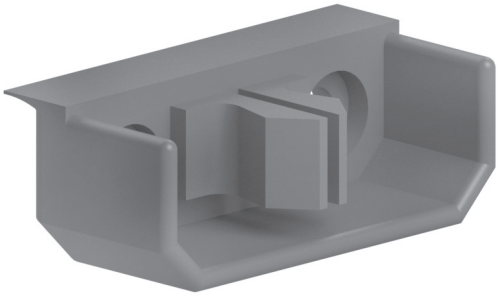

Cod	Note	g
013.100.005	For use with 013.100.004 or 013.100.006 - Da usare con 013.100.004 o 013.100.006 - Para usar con 013.100.004 o 013.100.006 - À utiliser avec 013.100.004 ou 013.100.006 - Mit 013.100.004 oder 013.100.006 zu verwenden	25

RAL 7023 polyamide
Poliammide RAL 7023
Poliamida color RAL 7023
Polyamide RAL 7023
Polyamid RAL 7023

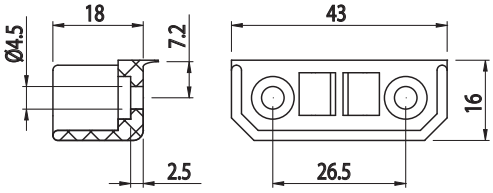

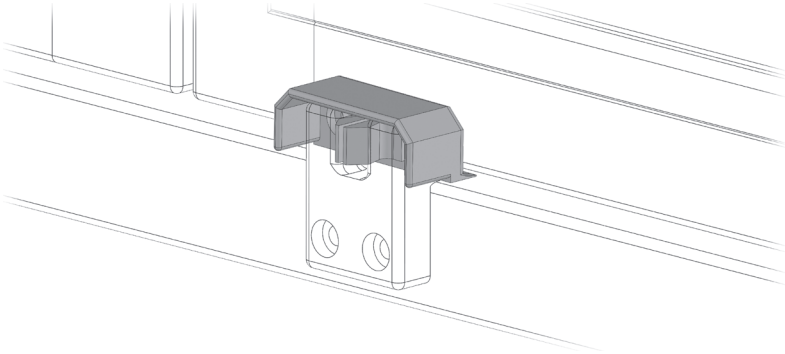

SNAP CLOSURE SPACER
DISTANZIALE CHIUSURA A SCATTO
DISTANCIADOR CIERRE DE TRINQUETE
ÉCARTEUR FERMETURE À DÉCLIC
DISTANZSTÜCK SCHNAPPVERSCHLUSS

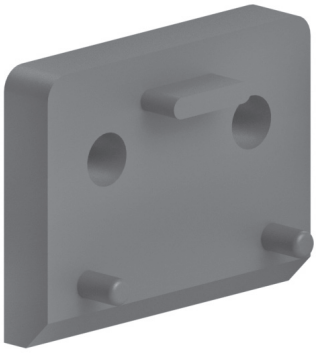

Cod	Note	g
013.100.007	For use with 013.100.004 or 013.100.006 - Da usare con 013.100.004 o 013.100.006 - Para usar con 013.100.004 o 013.100.006 - À utiliser avec 013.100.004 ou 013.100.006 - Mit 013.100.004 oder 013.100.006 zu verwenden	10

RAL 7023 polyamide
Poliammide RAL 7023
Poliamida color RAL 7023
Polyamide RAL 7023
Polyamid RAL 7023

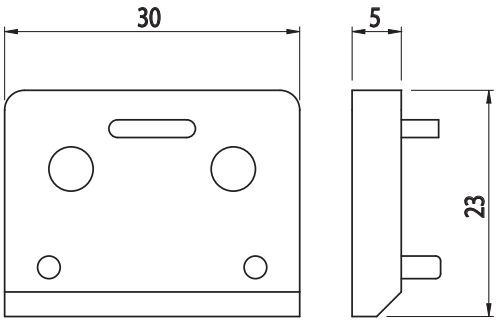

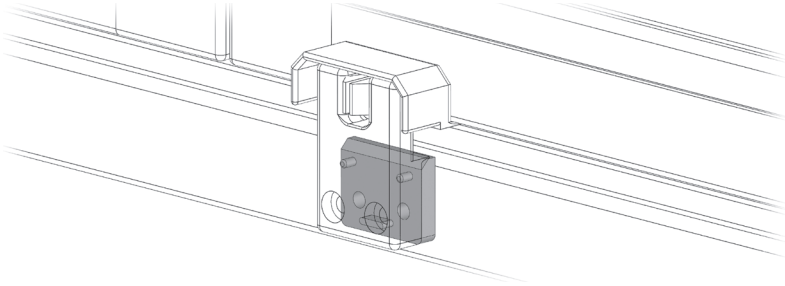

The reproduction of this catalogue is prohibited without authorization. We reserve the right to make changes to our products to enhance their features.

DOORSTOP
FERMAPORTA
TOPE DE PUERTA
ARRÊT DE PORTE
TÜRSTOPPER

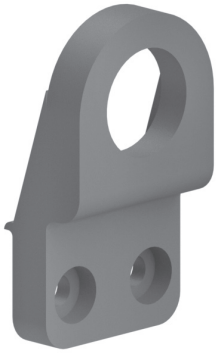

Cod	Note	g
013.100.008	Use with magnet 084.523.001 - Da usare con il magnete 084.523.001 - Para usar con el imán 084.523.001 - À utiliser avec l'aimant 084.523.001 - Mit Magnet 084.523.001 zu verwenden	13

RAL 7023 polyamide
Poliammide RAL 7023
Poliamida color RAL 7023
Polyamide RAL 7023
Polyamid RAL 7023

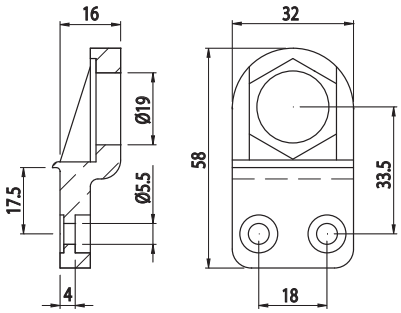

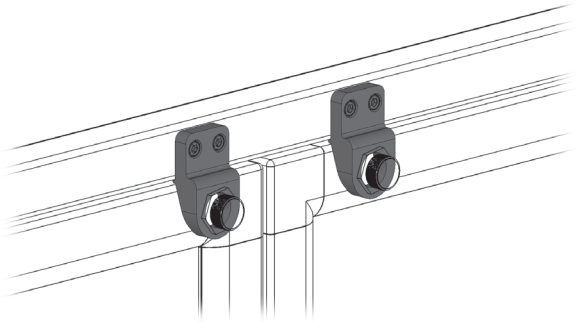

DOORSTOP
FERMAPORTA
TOPE DE PUERTA
ARRÊT DE PORTE
TÜRSTOPPER

Cod	Note	g
013.100.044	For M18 magnet - Per magnete M18 - Para imán M18 - Pour aimant M18 - Für Magnet M18	11

RAL 7023 polyamide
Poliammide RAL 7023
Poliamida color RAL 7023
Polyamide RAL 7023
Polyamid RAL 7023

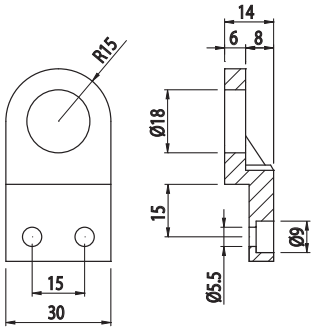

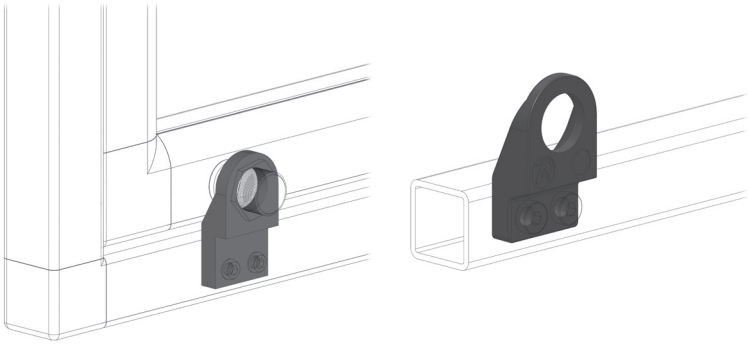

The reproduction of this catalogue is prohibited without authorization. We reserve the right to make changes to our products to enhance their features.

DOORSTOP
FERMAPORTA
TOPE DE PUERTA
ARRÊT DE PORTE
TÜRSTOPPER

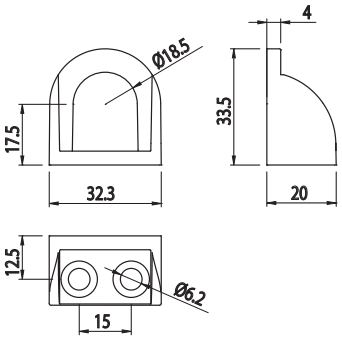

Cod	Note	g
013.100.009	Use with magnet 084.523.001 - Da usare con il magnete 084.523.001 - Para usar con el imán 084.523.001 - À utiliser avec l'aimant 084.523.001 - Mit Magnet 084.523.001 zu verwenden	21

PA6+GF, RAL 7023

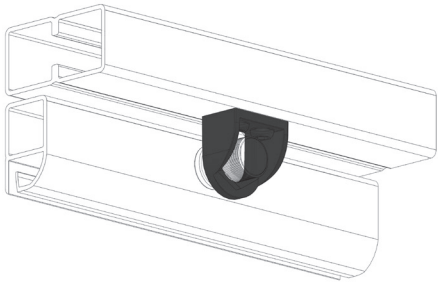

PIN FOR FOLDING DOORS
PERNO PER PORTA SCORREVOLE A SOFFIETTO
PERNO PARA PUERTAS CORREDIZAS CON FUELLE
PIVOT POUR PORTES COULISSANTES À SOUFFLET
BOLZEN FÜR FALSCHIEBETÜREN

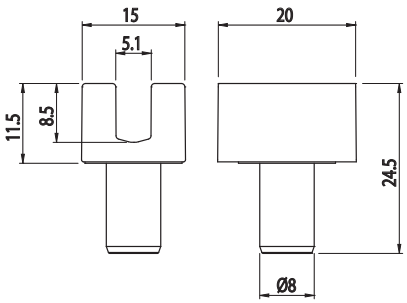

Cod	Note	g
013.100.020	Pin for folding doors - Perno per porte scorrevoli a soffietto - Perno para puertas corredizas con fuelle - Pivot pour portes coulissantes à soufflet - Bolzen für Faltschiebetüren	6

POM, RAL 7023

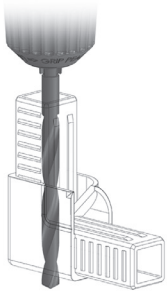

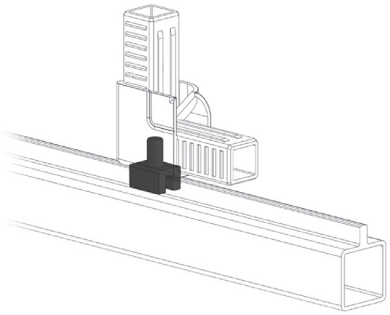

The reproduction of this catalogue is prohibited without authorization. We reserve the right to make changes to our products to enhance their features.

INTERMEDIATE SLIDING BLOCK

PATTINO INTERMEDIO
BLOQUE DESLIZANTE INTERMEDIO
BLOC COULISSANT INTERMÉDIAIRE
MITTELGLEITBLOCK

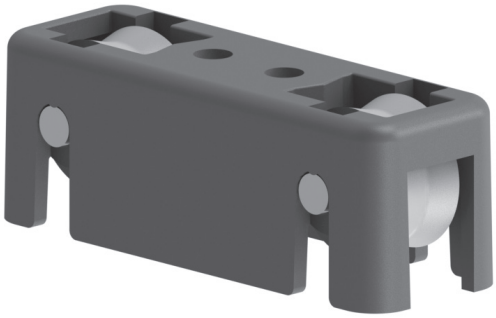

Cod	Note	g
013.100.010	For profile 013.025.011 / 012 / 013, profile cutting required - Per profilo 013.025.011 / 012 / 013, necessario taglio profilo - Para perfil 013.025.011 / 012 / 013, corte del perfil necesario - Pour profilé 013.025.011 / 012 / 013, nécessaire découpe profilé - Für Profil 013.025.011 / 012 / 013, Schnitt des Profils notwendig	19

Screws included
Viti incluse
Tornillos incluidos
Vis fournies
Schrauben im Lieferumfang enthalten

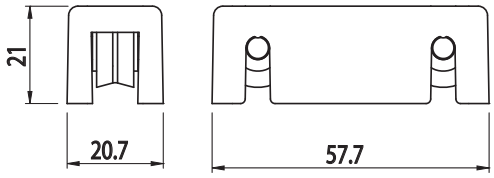

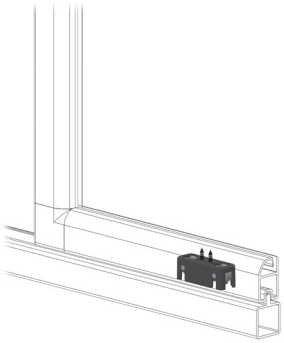

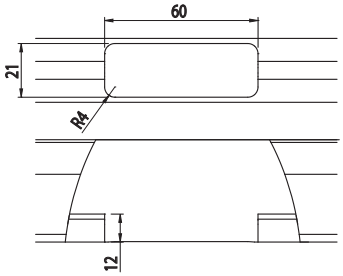

SLIDING DOOR STOPPER

FERMO PER SCORREVOLE
RÉTEN PARA PUERTA CORREDIZA
BUTÉE POUR PORTE COULISSANTE
FESTSTELLER FÜR SCHIEBETÜR

Cod	Note	g
013.100.013	Sliding door stopper - Fermo per scorrevole - Réten para puerta corrediza - Butée pour porte coulissante - Feststeller für Schiebetür	4

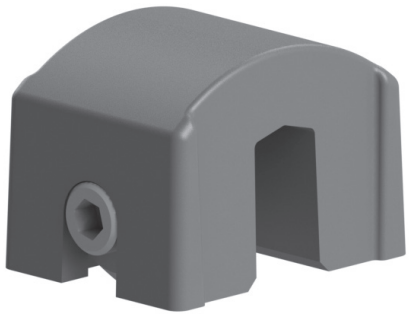

PA6+GF, RAL 7023

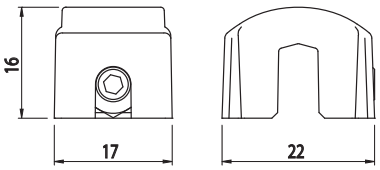

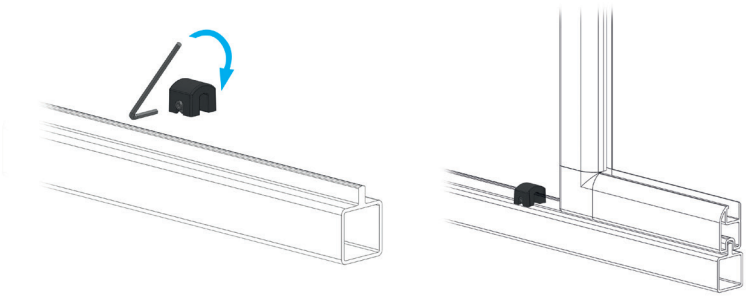

The reproduction of this catalogue is prohibited without authorization. We reserve the right to make changes to our products to enhance their features.

SLIDING DOOR ROLLER
ROTELLA PER SCORREVOLE
RUEDA PARA PUERTA CORREDIZA
ROULETTE POUR PORTE COULISSANTE
SCHIEBETÜRROLLE

Cod	Note	g
013.100.038	White - Bianco - Blanco - Blanc - Weiß	3

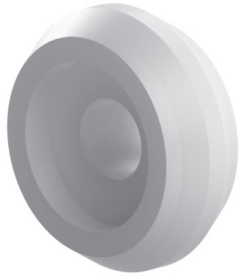

POM

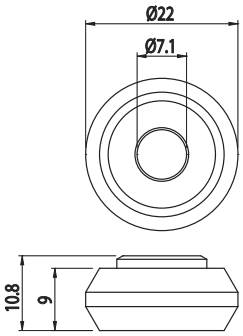

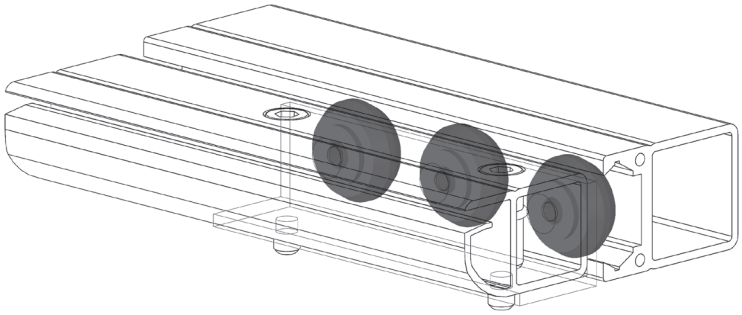

PIN
PERNO
PERNO
TIGE
STIFT

STAINLESS STEEL

Cod	Note	g
013.100.039	For roller 013.100.038 - Per rotella 013.100.038 - Para rueda 013.100.038 - Pour roulette 013.100.038 - Für Rolle 013.100.038	3

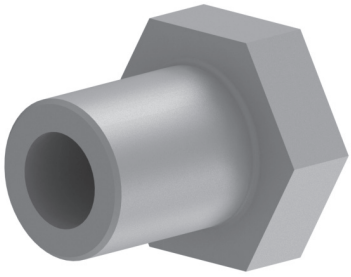

Stainless steel
Acciaio inox
Acero inoxidable
Acier inox
Rostfreier Stahl

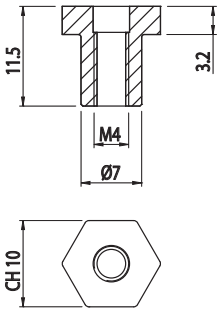

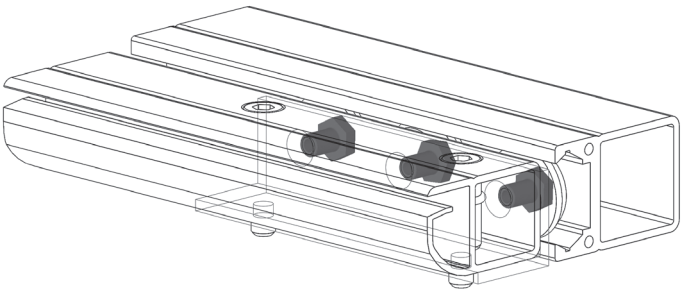

The reproduction of this catalogue is prohibited without authorization. We reserve the right to make changes to our products to enhance their features.

ROLLERS SUPPORT
SUPPORTO RUOTE
SOPORTE PARA RUEDAS
SUPPORT POUR ROULETTES
HALTERUNG FÜR ROLLEN

Cod	Note	Kg/m
013.100.040	For horizontal sliding rail - Per carrello orizzontale - Para carro horizontal - Pour chariot horizontal - Für horizontales Gleiten	0,04

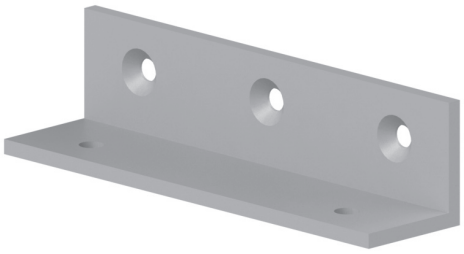

Anodised aluminium
Alluminio anodizzato
Aluminio anodizado
Aluminium anodisé
Eloxiertes Aluminium

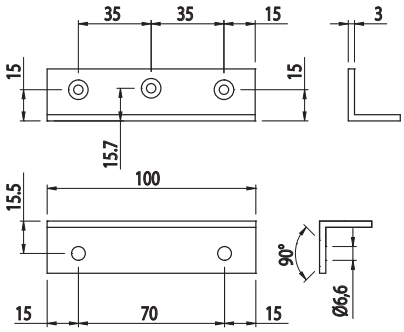

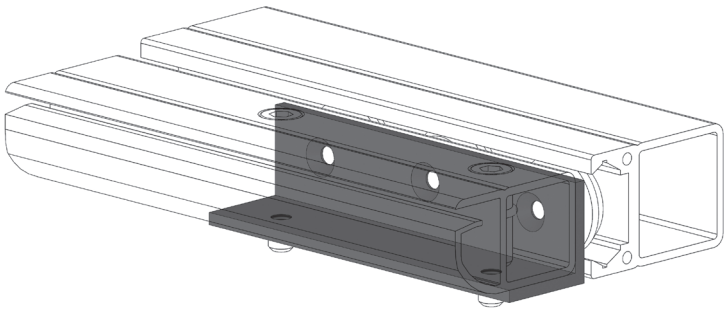

ROLLERS FIXING PLATE
PIASTRA SUPPORTO RUOTE
PLACA DE SOPORTE RUEDAS
PLAQUE DE SUPPORT DES ROULETTES
HALTERUNG FÜR ROLLEN

Cod	Note	g
013.100.041	For horizontal sliding rail - Per carrello orizzontale - Para carro horizontal - Pour chariot horizontal - Für horizontales Gleiten	50,2

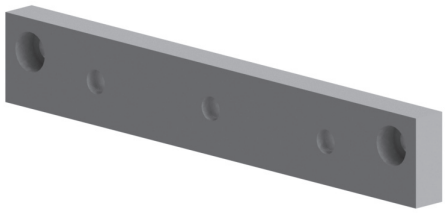

Anodised aluminium
Alluminio anodizzato
Aluminio anodizado
Aluminium anodisé
Eloxiertes Aluminium

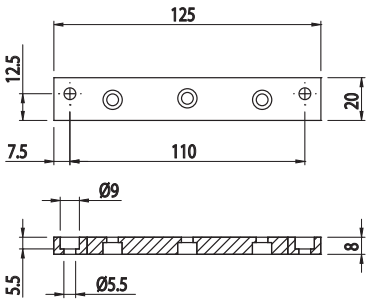

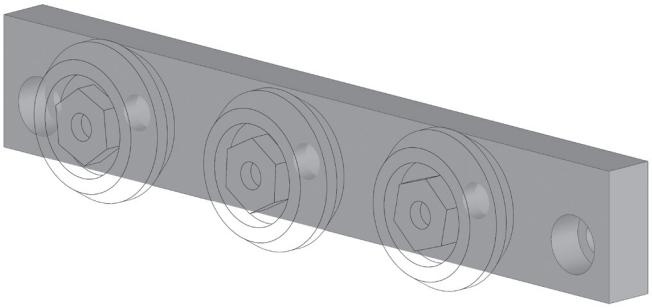

The reproduction of this catalogue is prohibited without authorization. We reserve the right to make changes to our products to enhance their features.

GLASS CLAMP WITH EJECTORS
FERMAVETRO CON ESPULSORI
CLIP PARA VIDRIO CON EJECTOR
PINCE DE FIXATION VERRE AVEC ÉJECTEUR
GLASHALTER MIT AUSWERFER

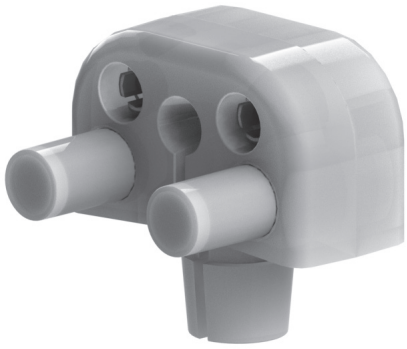

Cod	Note	g
013.100.011	Ø 10,2 / 10,25 profile drilling required - Necessario foro Ø 10,2 / 10,25 su profilo - Agujero necesario en el perfil Ø 10,2 / 10,25 - Nécessaire perçage profilé Ø 10,2 / 10,25 - Bohrung des Perfiles notwendig Ø 10,2 / 10,25	8

TPC-ET

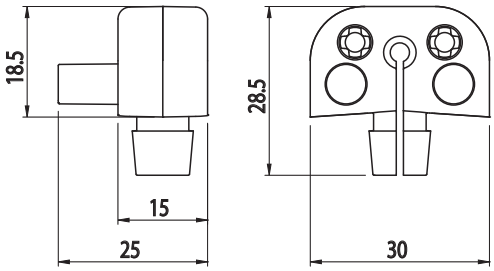

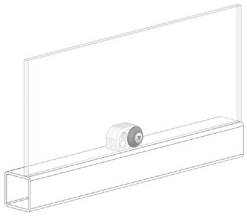

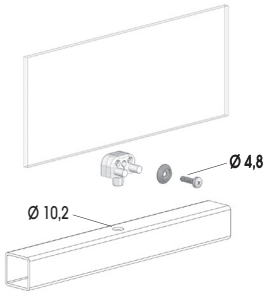

GLASS CLAMP
FERMAVETRO
CLIP PARA VIDRIO
PINCE DE FIXATION VERRE
GLASHALTER

Cod	Note	g
013.100.012	Ø 10,2 / 10,25 Profile drilling required - Necessario foro Ø 10,2 / 10,25 su profilo - Agujero necesario en el perfil 10,2 / 10,25 - Nécessaire perçage profilé 10,2 / 10,25 - Bohrung des Perfiles notwendig 10,2 / 10,25	7

TPC-ET

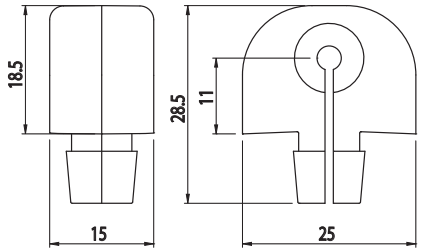

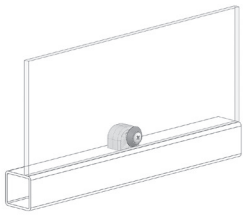

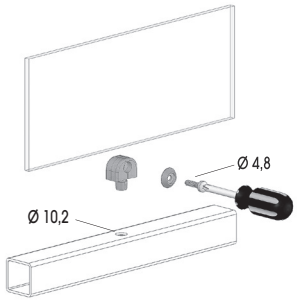

The reproduction of this catalogue is prohibited without authorization. We reserve the right to make changes to our products to enhance their features.

GLASS RETENTION BLOCK
BLOCCHETTO FERMAVETRO
BLOQUE SUJETA-CRISTAL
BLOC DE FIXATION VERRE
SCHEIBENSTOPPERBLOCK

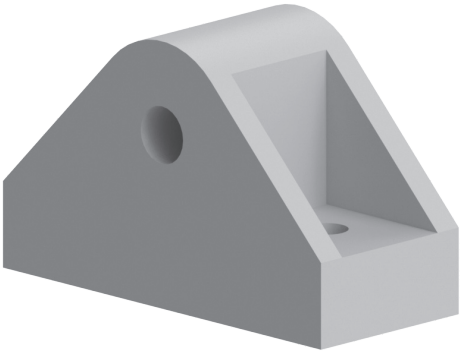

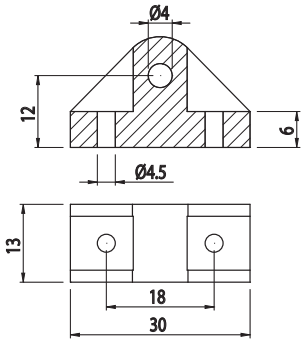

Cod	Note	g
084.509.001	Panel thickness 1-8 mm - Spessore pannelli 1-8 mm - Grosor de los paneles 1-8 mm - Épaisseur panneaux 1-8 mm - Plattendicke 1-8 mm	4

Grey polyamide
Poliammide grigio
Poliamida color gris
Polyamide gris
Polyamid grau

GLASS RETENTION BLOCK
BLOCCHETTO FERMAVETRO
BLOQUE SUJETA-CRISTAL
BLOC DE FIXATION VERRE
SCHEIBENSTOPPERBLOCK

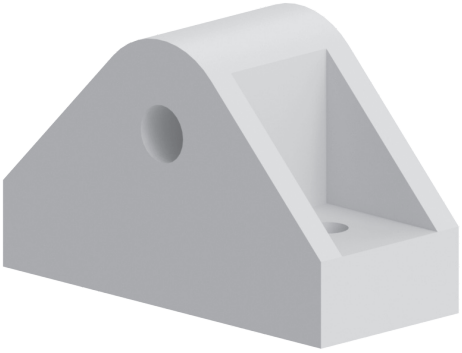

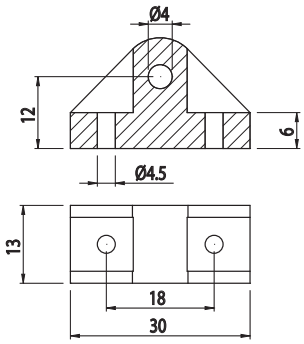

Cod	Note	g
013.100.054	Panel thickness 1-8 mm - Spessore pannelli 1-8 mm - Grosor de los paneles 1-8 mm - Épaisseur pannaux 1-8 mm - Plattendicke 1-8 mm	4

TPC-ET

The reproduction of this catalogue is prohibited without authorization. We reserve the right to make changes to our products to enhance their features.

SHEET AND MESH CLAMPS

MORSETTO PER LASTRE E RETI
ABRAZADERA PARA PLACAS Y REDES
PINCE POUR PLAQUES ET FILETS
KLEMME FÜR PLATTEN UND NETZE

NEW

Cod	A	B	g
013.100.066	12,15	1,9	12,8
013.100.067	14,65	1,9	12,3
013.100.068	12,15	2,9	12,4
013.100.069	14,65	2,9	11,9

PA6+GF RAL 7023

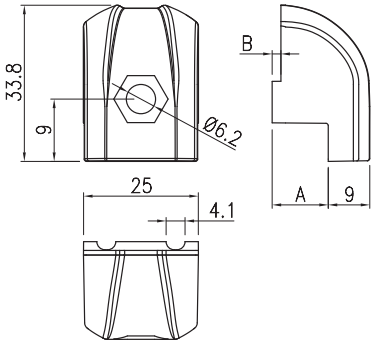

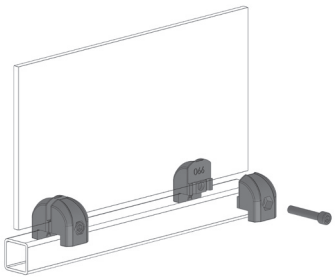

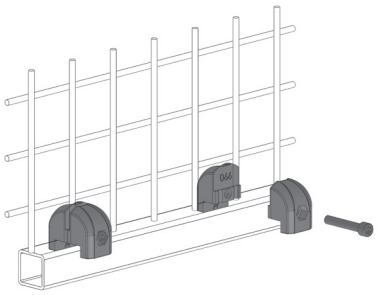

Code Codice Código Code Code	Panel thickness Spessore pannello Espesor del panel Épaisseur du panneau Dicke Platte	Profile section Sezione profilo Sección del perfil Section profil
013.100.066+013.100.066	4	25
013.100.067+013.100.067	4	30
013.100.066+013.100.068	5	25
013.100.067+013.100.069	5	30
013.100.068+013.100.068	6	25
013.100.069+013.100.069	6	30

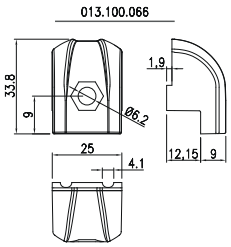

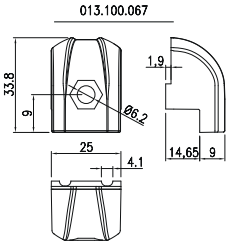

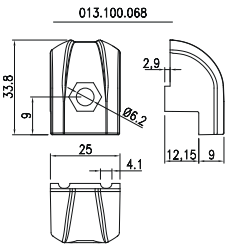

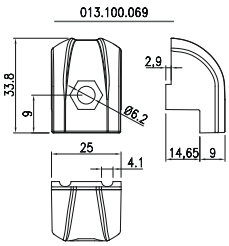

The reproduction of this catalogue is prohibited without authorization. We reserve the right to make changes to our products to enhance their features.

BALL SPRING PLUNGER
PRESSORE INOX
ÉMBOLO DE RESORTE CON BOLA
POUSSOIR À RESSORT AVEC BILLE
FEDERNDES DRUCKSTÜCK MIT KUGEL

Cod	Note	g
013.100.025	Ø8	2,2

Stainless steel, POM ball
Inox, puntale in POM
Acier inox, bille en POM
Acero inoxidable, bola en POM Rostfreier Stahl, Kugel aus POM

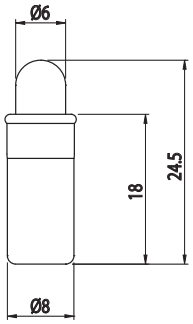

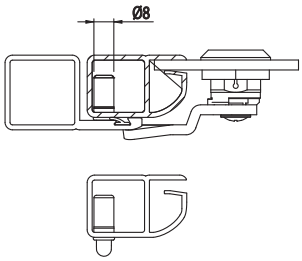

PLASTIC WASHER
RONDELLA IN PLASTICA
ARANDELA EN PLÁSTICO
RONDELLE EN PLASTIQUE
STOPPERRING AUS KUNSTSTOFF

Cod	Note	g
013.100.034	For panels and glasses - Per pannelli e vetri - Para paneles y cristales - Pour panneaux et vitres - Für Platten und Scheiben	4

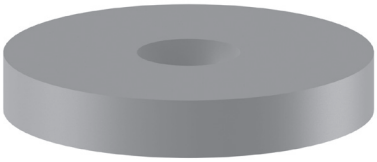

PE

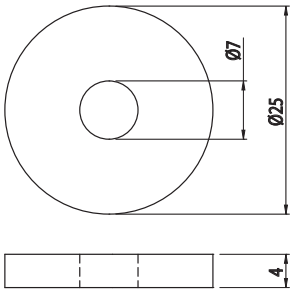

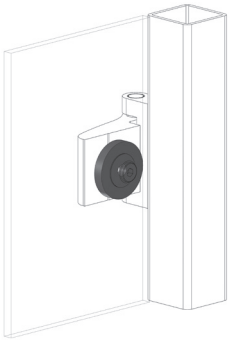

The reproduction of this catalogue is prohibited without authorization. We reserve the right to make changes to our products to enhance their features.

MAGNET
MAGNETE
IMÁN
AIMANT
MAGNET

Cod	Note	g
084.523.001	Attractive force 50 N - Forza di attrazione 50 N - Fuerza de atracción 50 N - Force attractive 50 N - Anziehungskraft 50 N	52

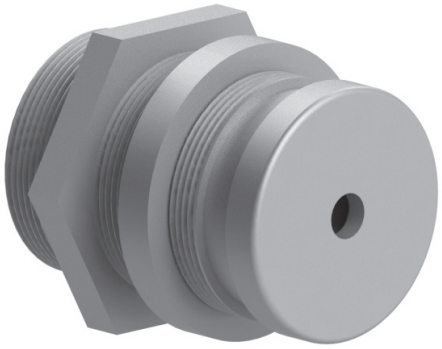

Zinc plated steel
Acciaio zincato
Acero galvanizado
Acier zingué
Verzinkter Stahl

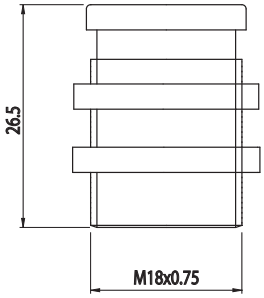

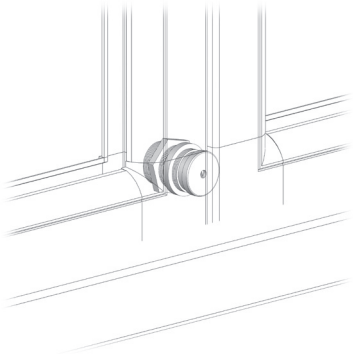

LOCK WITH KEY
SERRATURA A CHIAVE
CERRADURA DE LLAVE
SERRURE À CLÉ
SCHLÜSSELSCHLOSS

Cod	Note	g
013.100.030	Key not included - Chiave non inclusa - Clave no incluida - Clé non fournie - Schlüssel nicht inklusiv	46

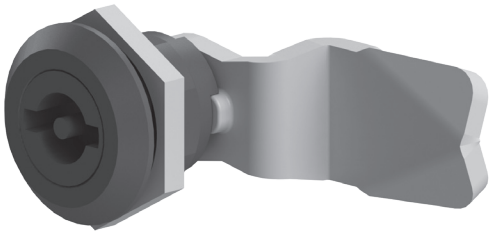

Zinc plated steel
Acciaio zincato
Acero galvanizado
Acier zingué
Verzinkter Stahl

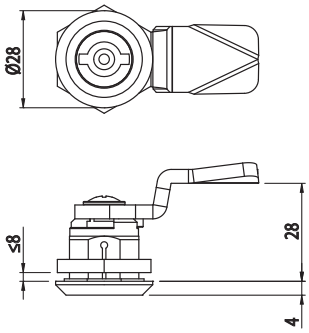

Lavorazione su pannello

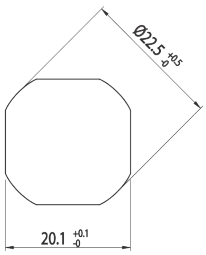

Key - Chiave - Llave - Clé - Schlüssel			
Cod	Mat	g	Col
013.100.031	Zama	0,5	■

The reproduction of this catalogue is prohibited without authorization. We reserve the right to make changes to our products to enhance their features.

LOCK WITH KEY
SERRATURA A CHIAVE
CERRADURA DE LLAVE
SERRURE À CLÉ
SCHLÜSSELSCHLOSS

Cod	Note	g
013.100.032	Key not included - Chiave non inclusa - Clave no incluida - Clé non fournie - Schlüssel nicht inklusiv	81

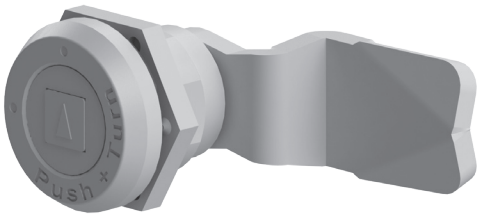

Zinc plated steel
Acciaio zincato
Acero galvanizado
Acier zingué
Verzinkter Stahl

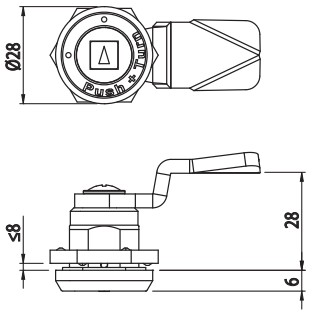

Lavorazione su pannello

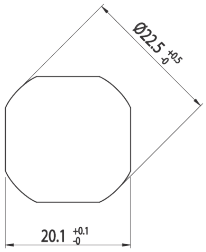

Key - Chiave - Llave - Clé - Schlüssel			
Cod	Mat	g	Col
013.100.033	Zama	0,5	■

The reproduction of this catalogue is prohibited without authorization. We reserve the right to make changes to our products to enhance their features.

GAS SPRING
MOLLA A GAS
MUELLE DE GAS
RESSORT À GAZ
GASFEDER

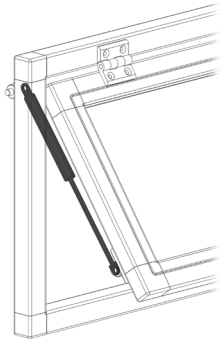

Cod	N	A	B	g
084.527.001	50	110	263	96
084.527.002	100	110	263	96
084.527.003	150	110	263	96
084.527.004	200	110	263	95
084.527.005	250	110	263	95
084.527.006	300	110	263	97
084.527.007	100	115	305	109
084.527.008	100	142	365	190
084.527.009	200	142	365	190
084.527.010	250	142	365	194
084.527.011	300	142	365	194
084.527.012	350	142	365	194
084.527.013	250	200	483	237
084.527.014	350	200	483	237

Other models available on request
A richiesta sono fornibili altri modelli
Bajo solicitud pueden suministrarse otros modelos
Autres modèles disponibles sur demande
Auf Anfrage können weitere Modelle geliefert werden

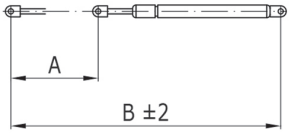

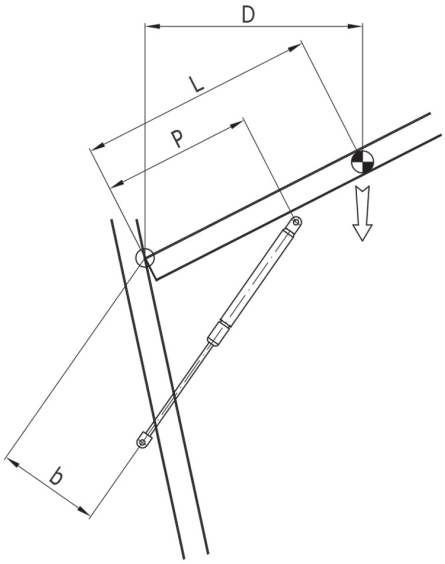

CALCOLO PER IL MONTAGGIO DI UNA MOLLA A GAS
GAS SPRING INSTALLATION CALCULATION / CÁLCULO PARA EL MONTAJE DE UN MUELLE DE GAS
CALCUL POUR LE MONTAGE D'UN RESSORT À GAZ / BERECHNUNG FÜR DIE MONTAGE EINER GASDRUCKFEDER

Definizione della forza di estensione F1 (N) a 20° C
Defining the extension force F1 (N) at 20° C
Definición de la fuerza de extensión F1 (N) a 20 °C
Définition de la force d'extension F1 (N) à 20°C
Definition der Dehnungskraft F1 (N) bei 20° C

$$F1 = \frac{G \times D}{b \times n} \times 13 \text{ (N)}$$

G = Peso del portellone in Kg
Weight of door in kg / Peso de la puerta en kg / Poids du battant en kg / Gewicht der Klappe in kg

L = Distanza tra il baricentro ed il punto di rotazione in mm
L = Distance between the centre of gravity and point of rotation in mm / Distancia entre el centro de gravedad y el punto de rotación en mm / Distance entre le barycentre et le point de rotation en mm / Abstand zwischen Schwerpunkt und Drehpunkt in mm

b = Braccio di leva utile della molla a gas in mm, portellone aperto
b = Effective lever arm of gas spring in mm with door open / Brazo de palanca útil del muelle de gas en mm, con la puerta abierta / Bras de levier utile du ressort à gaz en mm, battant ouvert / Nutzhebelarm der Gasdruckfeder in mm, geöffnete Klappe

13 = Coefficiente di conversione kg - N + riserva di sicurezza
13 = kg to N conversion factor + safety margin / Coeficiente de conversión kg - N + reserva de seguridad
Coefficient de conversion kg - N + marge de sécurité / Umrechnungsfaktor kg - N + Sicherheitsmarge

P = Fissaggio del portellone ca.2/3 L
P = Connection to door at approx. 2/3 of L / Fijación de la puerta en 2/3 L aprox. / Fixation du battant environ 2/3 L / Befestigung der Klappe ca.2/3 L

n = Numero delle molle a gas (Standard: n = 2)
n = Number of gas springs (2 x standard) / Número de muelles de gas (estándar: n = 2) / Nombre de ressorts à gaz (Standard : n = 2) / Anzahl der Gasdruckfedern (Standard: n = 2)

D = Braccio di leva utile della forza di gravità in mm, portellone aperto
D = Effective lever arm of force of gravity in mm with door open / Brazo de palanca útil de la fuerza de gravedad en mm, con la puerta abierta / Bras de levier utile de la force de gravité en mm, battant ouvert / Nutzhebelarm der Schwerkraft in mm, geöffnete Klappe

Esempio
Example / Ejemplo / Example / Beispiel

G = 30 kg, D = 400 mm, b = 200 mm, n = 2

$$F1 = \frac{30 \times 400}{200 \times 2} \times 13 = 390 \text{ N}$$

The reproduction of this catalogue is prohibited without authorization. We reserve the right to make changes to our products to enhance their features.

GAS SPRING SUPPORT
SUPPORTO PER MOLLA A GAS
SOPORTE PARA MUELLE DE GAS
SUPPORT POUR RESSORT À GAZ
HALTERUNG FÜR GASFEDER

Cod	Note	g
084.528.001	Use with 084.528.002 - Usare con 084.528.002 - Utilizar con 084.528.002 - Utiliser avec 084.528.002 - Verwenden mit 084.528.002	21

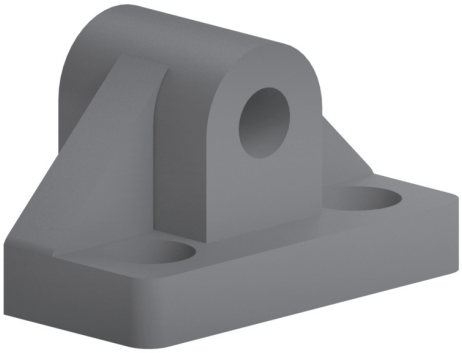

Grey polyamide
Poliammide grigio
Poliamida color gris
Polyamide gris
Polyamid grau

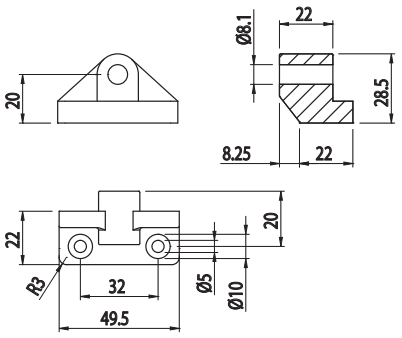

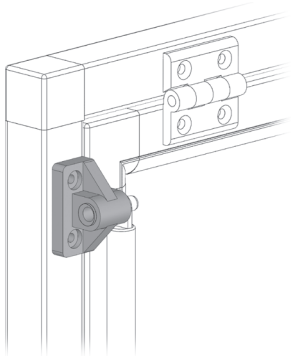

SUPPORT PIN
PERNO SUPPORTO
PERNO SOPORTE
PIVOT SUPPORT
AUFNAHMEBOLZEN

Cod	Note	g
084.528.002	For support 084.528.001 - Per supporto 084.528.001 - Para soporte 084.528.001 - Pour support 084.528.001 - Für Halterung 084.528.001	14

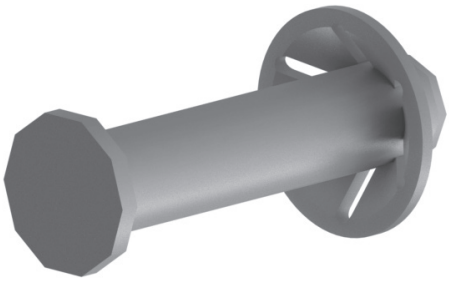

Zinc plated steel
Acciaio zincato
Acero galvanizado
Acier zingué
Verzinkter Stahl

Washer included
Rondella inclusa
Arandela incluida
Rondelle fournie
Unterlegscheibe im Lieferumfang enthalten

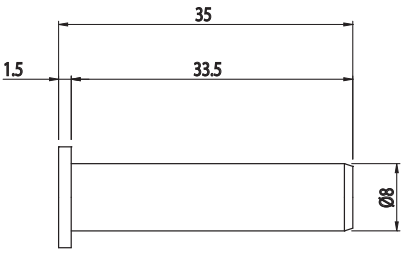

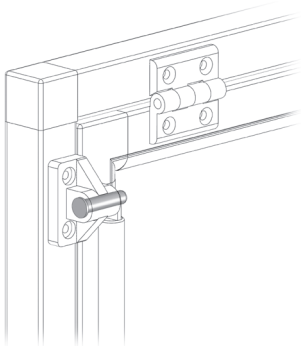

The reproduction of this catalogue is prohibited without authorization. We reserve the right to make changes to our products to enhance their features.

GAS SPRING SUPPORT
SUPPORTO PER MOLLA A GAS
SOPORTE PARA MUELLE DE GAS
SUPPORT POUR RESSORT À GAZ
HALTERUNG FÜR GASFEDER

Cod	Note	g
013.100.045	Use with 013.100.050 or 013.100.052 - Usare con 013.100.050 o 013.100.052 - Utilizar con 013.100.050 o 013.100.052 - Utiliser avec 013.100.050 ou 013.100.052 - Verwenden mit 013.100.050 oder 013.100.052	18,3

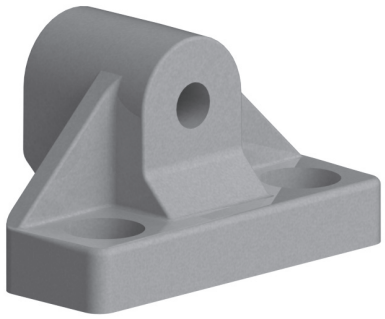

PA6+GF, RAL 7023

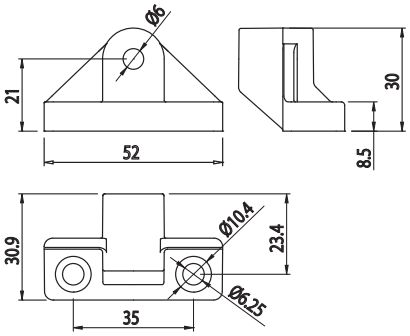

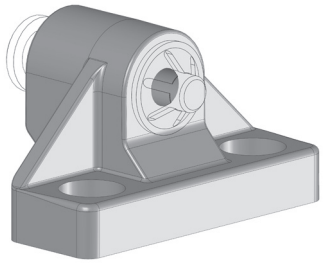

SUPPORT PIN
PERNO SUPPORTO
PERNO SOPORTE
PIVOT SUPPORT
AUFNAHMEBOLZEN

STAINLESS STEEL

Cod	Note	g
013.100.050	For support 013.100.045 - Per supporto 013.100.045 - Para soporte 013.100.045 - Pour support 013.100.045 - Für Halterung 013.100.045	10

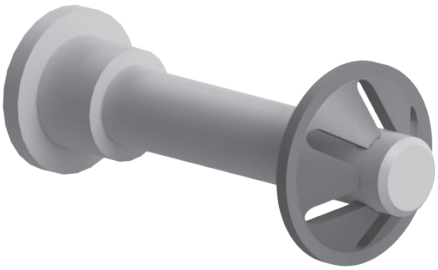

Stainless steel
Acciaio inox
Acero inoxidable
Acier inox
Rostfreier Stahl

Washer included
Rondella inclusa
Arandela incluida
Rondelle fournie
Unterlegscheibe im Lieferumfang enthalten

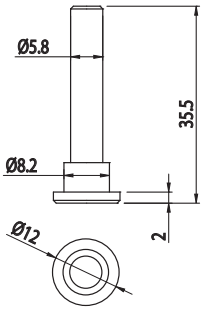

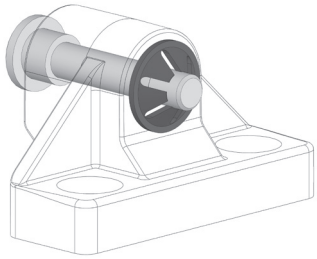

The reproduction of this catalogue is prohibited without authorization. We reserve the right to make changes to our products to enhance their features.

SUPPORT PIN
PERNO SUPPORTO
PERNO SOPORTE
PIVOT SUPPORT
AUFNAHMEBOLZEN

STAINLESS STEEL

Cod	Note	g
013.100.052	For support 013.100.045 - Per supporto 013.100.045 - Para soporte 013.100.045 - Pour support 013.100.045 - Für Halterung 013.100.045	8,3

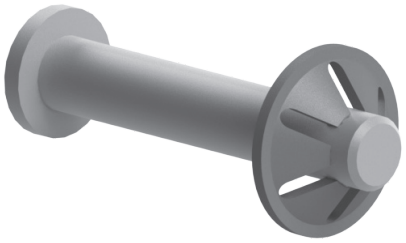

Stainless steel
Acciaio inox
Acero inoxidable
Acier inox
Rostfreier Stahl

Washer included
Rondella inclusa
Arandela incluida
Rondelle fournie
Unterlegscheibe im Lieferumfang enthalten

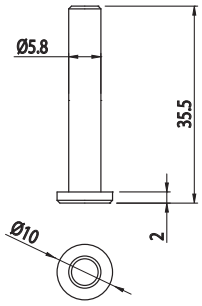

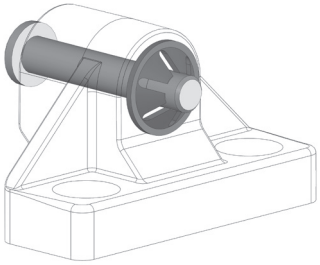

LOCKING RING
ANELLO DI BLOCCAGGIO
ANILLO DE SEGURIDAD
BAGUE DE SERRAGE
KLEMMRING

STAINLESS STEEL

Cod	Note	g
013.100.061	For 013.100.050 / 052, alternative to the washer - Per 013.100.050 / 052, in alternativa alla rondella - Para 013.100.050 / 052, como alternativa a la arandela - Pour 013.100.050 / 052, comme alternative à la rondelle - Für 013.100.050 / 052, alternativ zu der Unterlegscheibe	6

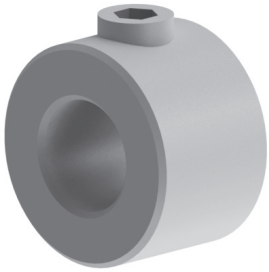

Stainless steel
Acciaio inox
Acero inoxidable
Acier inox
Rostfreier Stahl

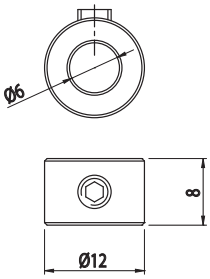

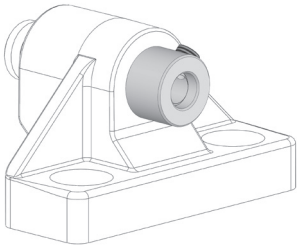

The reproduction of this catalogue is prohibited without authorization. We reserve the right to make changes to our products to enhance their features.

45° BRACKET
STAFFA 45°
SOPORTE ANGULO 45°
SUPPORT DE CONNEXION 45°
WINKELHALTERUNG 45°

STAINLESS STEEL

Cod	Note	g
013.100.023	Reinforcing part - Elemento di rinforzo - Elemento de refuerzo - Partie de renfort - Verstärkungsteil	116,5

Stainless steel
Acciaio inox
Acero inoxidable
Acier inox
Rostfreier Stahl

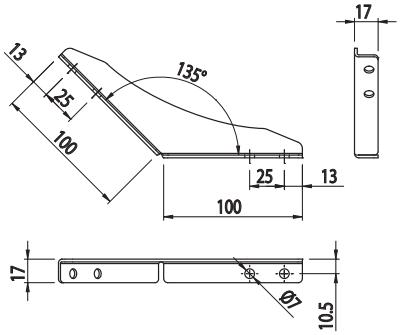

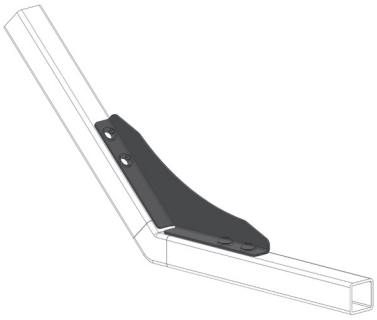

90° BRACKET
STAFFA 90°
SOPORTE ANGULO 90°
SUPPORT DE CONNEXION 90°
WINKELHALTERUNG 90°

STAINLESS STEEL

Cod	Note	g
013.100.022	Reinforcing part - Elemento di rinforzo - Elemento de refuerzo - Partie de renfort - Verstärkungsteil	158

Stainless steel
Acciaio inox
Acero inoxidable
Acier inox
Rostfreier Stahl

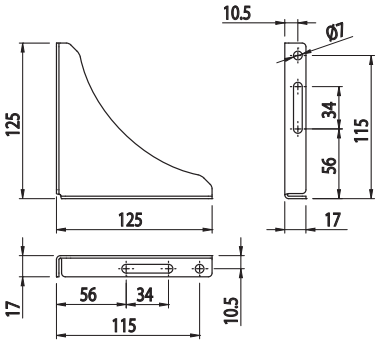

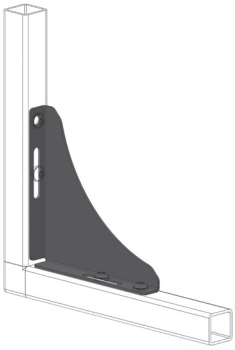

The reproduction of this catalogue is prohibited without authorization. We reserve the right to make changes to our products to enhance their features.

90° BRACKET
STAFFA 90°
SOPORTE ANGULO 90°
SUPPORT DE CONNEXION 90°
WINKELHALTERUNG 90°

Cod	Note	g
013.100.053	Reinforcing part - Elemento di rinforzo - Elemento de refuerzo - Partie de renfort - Verstärkung	24,4

PAG6+GF, RAL 7023

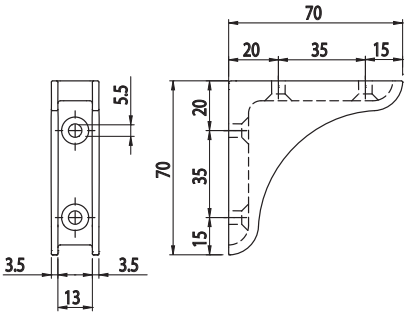

135° BRACKET
STAFFA 135°
SOPORTE DE ANGULO 135°
SUPPORT DE CONNEXION 135°
WINKELHALTERUNG 135°

NEW

Cod	Note	g
013.100.064	Reinforcing part - Elemento di rinforzo - Elemento de refuerzo - Partie de renfort - Verstärkung	36

PAG6+GF, RAL 7023

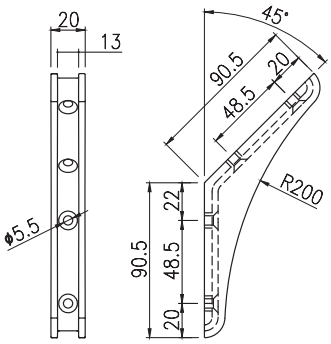

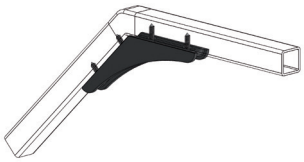

The reproduction of this catalogue is prohibited without authorization. We reserve the right to make changes to our products to enhance their features.

30X30 BRACKET
ANGOLARE 30X30
ESCUADRA 30X30
EQUERRE 30X30
ALUWINKEL 30X30

STAINLESS STEEL

Cod	Note	g
084.305.016	Assembly with M8x16 screws, not included - Montaggio con viti M8x16 non incluse - Montaje con tornillos M8x16, no incluidos - Montage avec vis M8x16 non fournies - Montage mit Schrauben M8x16 (nicht im Lieferumfang enthalten)	23

Stainless steel
Acciaio inox
Acero inoxidable
Acier inox
Rostfreier Stahl

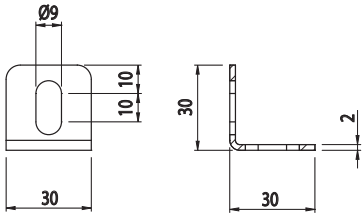

13X22 BRACKET
ANGOLARE 13X22
ESCUADRA 13X22
EQUERRE 13X22
ALUWINKEL 13X22

Cod	Note	g
084.305.006	Assembly with M6x12 screws, not included - Montaggio con viti M6x12 non incluse - Montaje con tornillos M6x12, no incluidos - Montage avec vis M6x12 non fournies - Montage mit Schrauben M6x12 (nicht im Lieferumfang enthalten)	6

Sandblasted aluminium
Alluminio sabbiato
Aluminio arenado
Aluminium sablé
Sandgestrahltes Aluminium

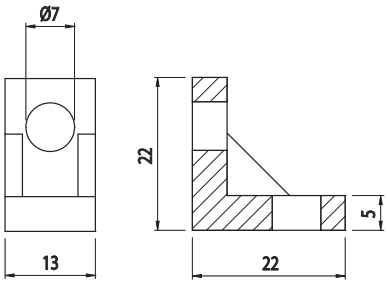

The reproduction of this catalogue is prohibited without authorization. We reserve the right to make changes to our products to enhance their features.

PROTECTION SUPPORT
SUPPORTO PROTEZIONE
SOPORTE PROTECCIÓN
SUPPORT PROTECTION
SCHUTZHALTERUNG

STAINLESS STEEL

Cod	Note	g
013.100.062	For profiles connection - Per giunzione profili - Para conectar los perfiles - Pour la connection des profilés - Für die Verbindung von Profilen	26

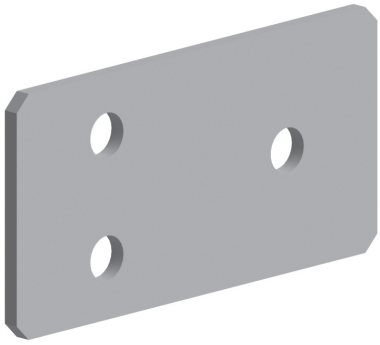

Stainless steel
Acciaio inox
Acero inoxidable
Acier inox
Rostfreier Stahl

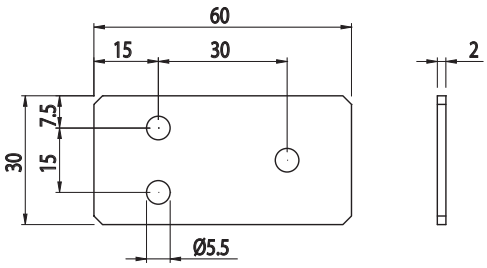

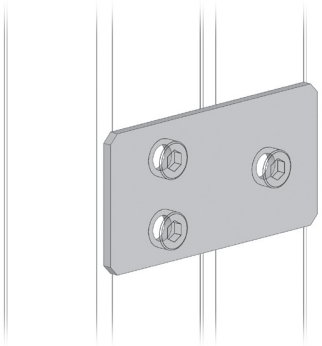

PROTECTION SUPPORT
SUPPORTO PROTEZIONE
SOPORTE PROTECCIÓN
SUPPORT PROTECTION
SCHUTZHALTERUNG

STAINLESS STEEL

Cod	Note	g
013.100.063	For profiles connection - Per giunzione profili - Para conectar los perfiles - Pour la connection des profilés - Für die Verbindung von Profilen	22

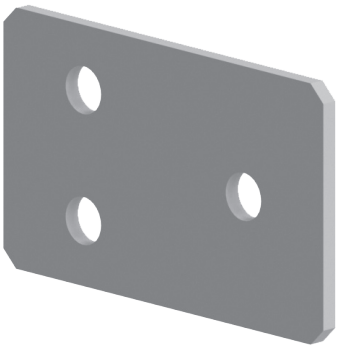

Stainless steel
Acciaio inox
Acero inoxidable
Acier inox
Rostfreier Stahl

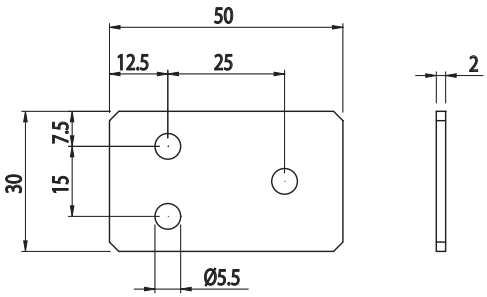

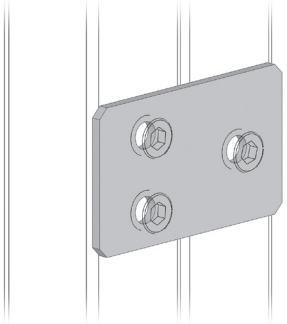

The reproduction of this catalogue is prohibited without authorization. We reserve the right to make changes to our products to enhance their features.

PLATE FOR MICROSWITCH
PIASTRINA PER MICRO
PLACA PARA MICROINTERRUPTOR
PLAQUETTE POUR MICRO-CONTACTEUR
PLATTE FÜR MIKROSCHALTER

STAINLESS STEEL

Cod	Note	g
084.604.004	For external fastening - Per fissaggio esterno - Para fijació externa - Pour fixation externe - Für äußere Befestigung	86

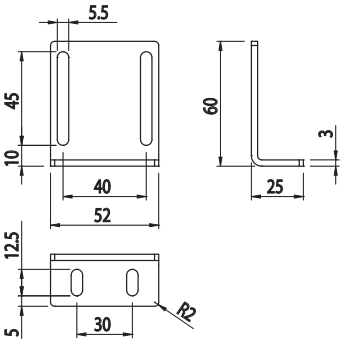

Stainless steel
Acciaio inox
Acero inoxidable
Acier inox
Rostfreier Stahl

The reproduction of this catalogue is prohibited without authorization. We reserve the right to make changes to our products to enhance their features.

STRUCTURAL ADHESIVE
ADESIVO STRUTTURALE
PEGAMENTO ESTRUCTURAL
COLLE STRUCTURALE EPOXY
KONSTRUKTIONSKLEBSTOFF

Cod	Note	g
013.818.001	High-strength structural adhesive for plastic and metal - Adesivo strutturale ad alta resistenza per plastica e metallo - Pegamento estructural de alta resistencia para plástico y Metal - Colle structurale epoxy à haute résistance pour plastique et métal - Hochfester Konstruktionsklebstoff für Kunststoff und Metall	60

Solvent free
Senza solvente
Sin solvente
Sans solvant
Kein Lösungsmittel

STRUCTURAL ADHESIVE
ADESIVO STRUTTURALE
PEGAMENTO ESTRUCTURAL
COLLE STRUCTURALE EPOXY
KONSTRUKTIONSKLEBSTOFF

Cod	Note	g
013.818.002	High-strength structural adhesive for plastic and metal - Adesivo strutturale ad alta resistenza per plastica e metallo - Pegamento estructural de alta resistencia para plástico y Metal - Colle structurale epoxy à haute résistance pour plastique et métal - Hochfester Konstruktionsklebstoff für Kunststoff und Metall	60

Trasparent
Trasparente
Trasparente
Transparent
Trasparent

Silicon free
Senza silicone
Sin silicona
Sans silicone
Silikonfrei

The reproduction of this catalogue is prohibited without authorization. We reserve the right to make changes to our products to enhance their features.

MANUAL DISPENSER
APPLICATORE MANUALE
DISPENSADOR MANUAL
DISTRIBUTEUR MANUEL
HAND DISPENSER

Cod	Note	g
013.818.003	For structural adhesive - Per adesivo strutturale - Para pegamento estructural - Pour colle structurale - Für Konstruktionsklebstoff	70

DOUBLE SIDED TAPE
NASTRO BIADESIVO
CINTA ADHESIVA DE DOBLE CARA
RUBAN ADHÉSIF DOUBLE FACE
DOPPELSEITIGES KLEBEBAND

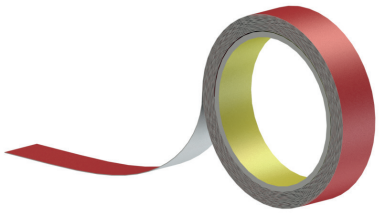

Cod	Note	g/m
013.818.004	For profiles 013.025.014 / 015 / 016 – 013.030.014 / 015 / 016 - Per profili 013.025.014 / 015 / 016 – 013.030.014 / 015 / 016 - Para perfiles 013.025.014 / 015 / 016 – 013.030.014 / 015 / 016 - Pour profilés 013.025.014 / 015 / 016 – 013.030.014 / 015 / 016 - Für Profile 013.025.014 / 015 / 016 – 013.030.014 / 015 / 016	7,6

The reproduction of this catalogue is prohibited without authorization. We reserve the right to make changes to our products to enhance their features.

SET OF ALLEN KEYS
SET DI CHIAVI ESAGONALI
SET DE LLAVES HEXAGONALES
JEU DE CLÉS ALLEN
SECHSKANTSCHLÜSSELSET

Cod	Note	g
084.818.010	Set of 2.5 - 6 mm wrenches - Set di chiavi 2,5 - 6 - Set de llaves 2,5-6 - Jeu de clés 2,5 - 6 - Schlüss-elset 2,5 - 6	700

DISINFECTANT CLEANER
PULITORE DISINFETTANTE
LIMPIADOR DESINFECTANTE
DÉSINFECTANT NETTOYANT
DESINFEKTIONSREINIGER

Cod	Note	m
013.818.005		750

The reproduction of this catalogue is prohibited without authorization. We reserve the right to make changes to our products to enhance their features.

ASSEMBLY SYSTEMS
SISTEMI DI MONTAGGIO
SISTEMAS DE MONTAJE
SISTÈMES DE MONTAGE
MONTAGESYSTEME

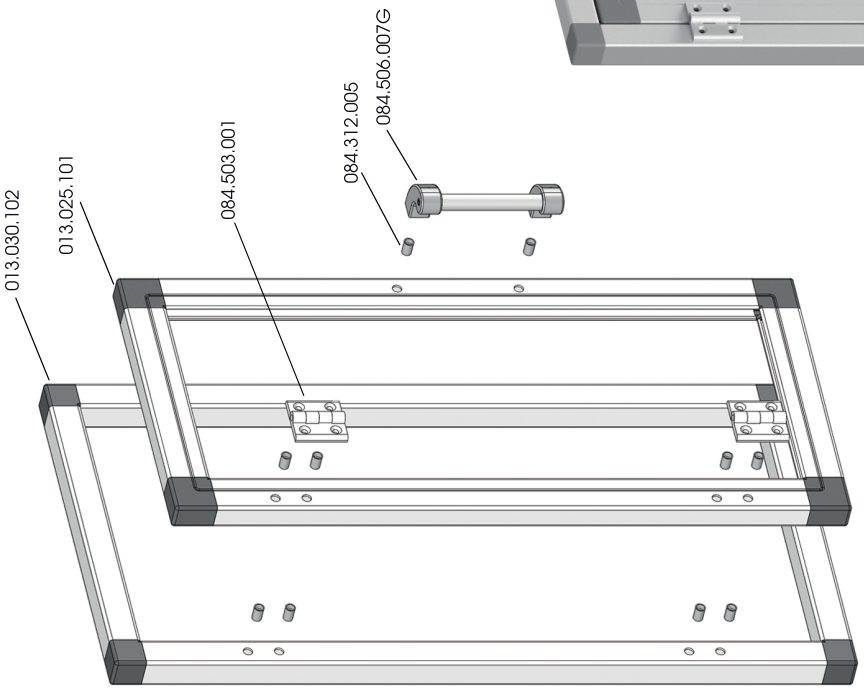

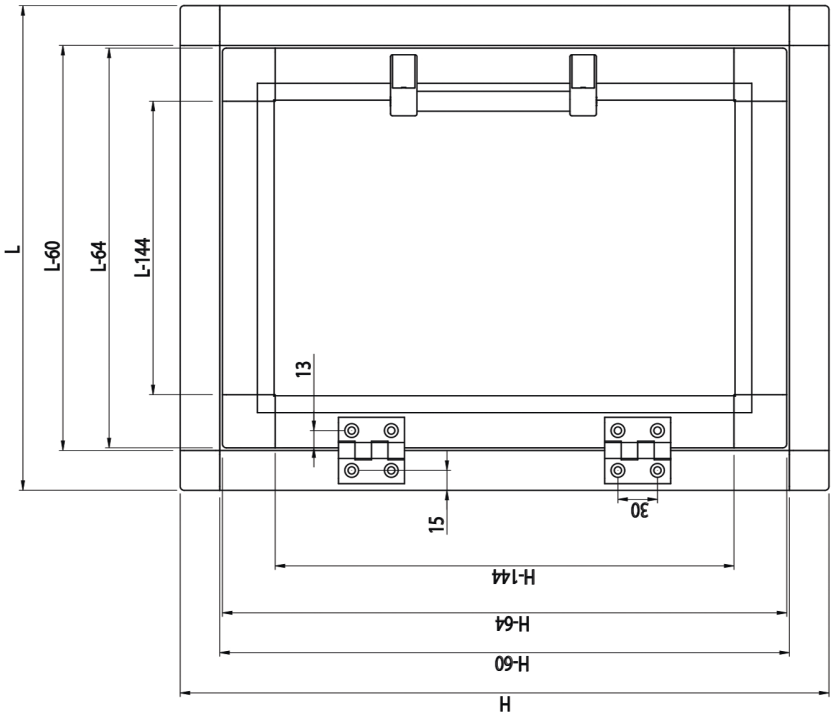

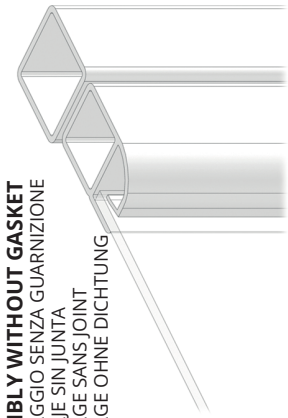

ASSEMBLY WITHOUT GASKET
MONTAGGIO SENZA GUARNIZIONE
MONTAJE SIN JUNTA
MONTAGE SANS JOINT
MONTAGE OHNE DICHTUNG

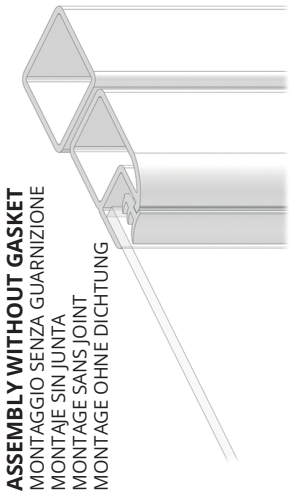

ASSEMBLY WITHOUT GASKET
MONTAGGIO SENZA GUARNIZIONE
MONTAJE SIN JUNTA
MONTAGE SANS JOINT
MONTAGE OHNE DICHTUNG

The reproduction of this catalogue is prohibited without authorization. We reserve the right to make changes to our products to enhance their features.

DOUBLE WING DOOR ASSEMBLY SYSTEM
SISTEMA DI MONTAGGIO PORTA A DUE ANTE
SISTEMA DE MONTAJE PARA PUERTA DOBLE
SISTÈME DE MONTAGE POUR PORTE DOUBLE VANTAUX
MONTAGESYSTEM FÜR DOPPELFLÜGELTÜR

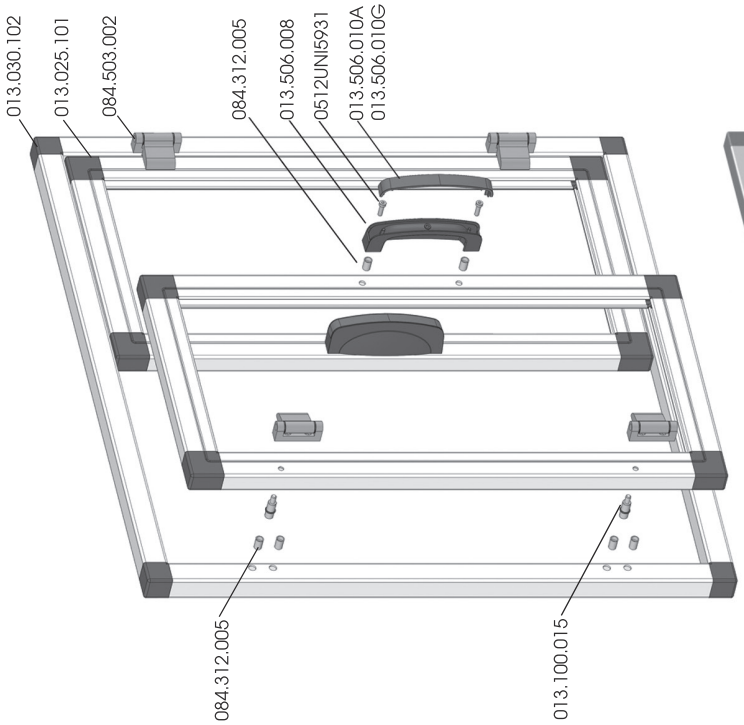

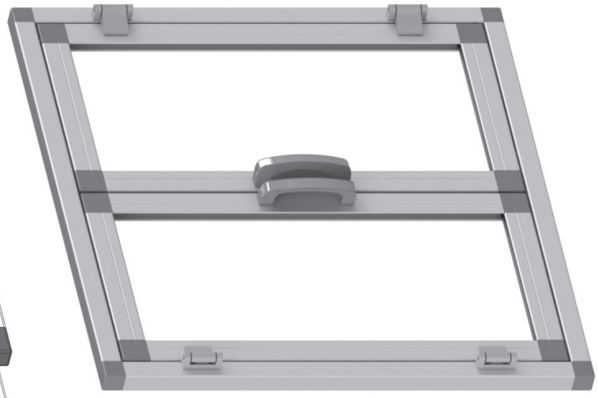

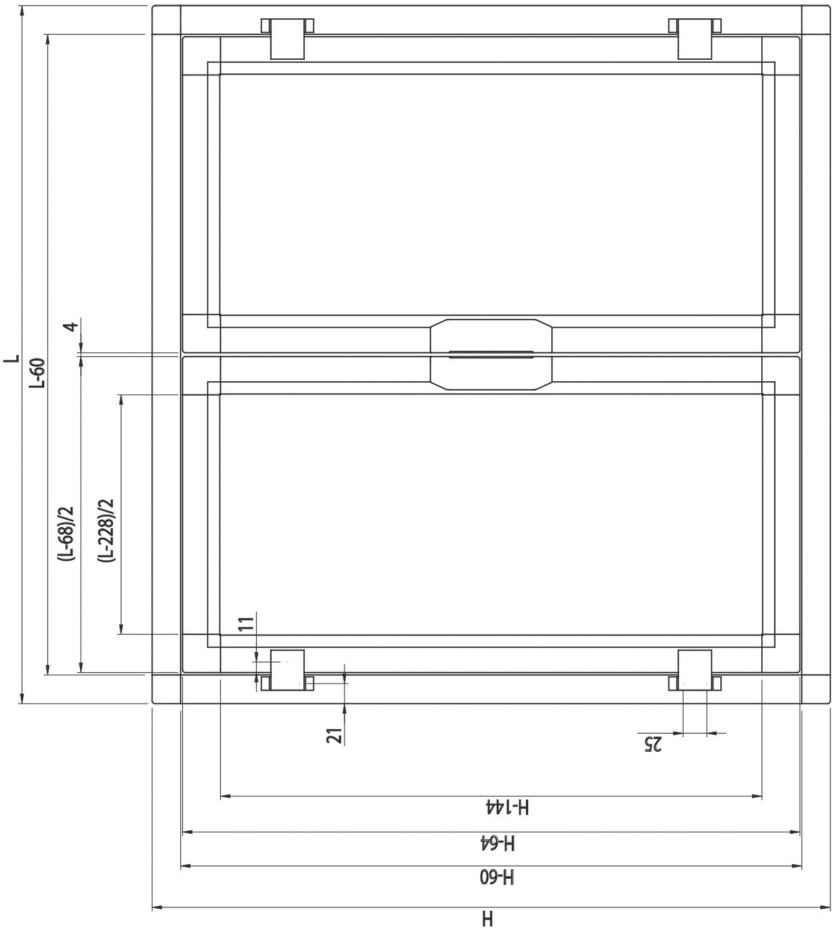

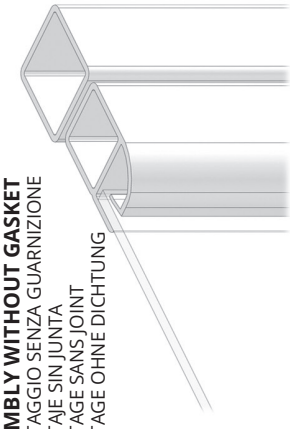

ASSEMBLY WITHOUT GASKET
MONTAGGIO SENZA GUARNIZIONE
MONTAJE SIN JUNTA
MONTAGE SANS JOINT
MONTAGE OHNE DICHTUNG

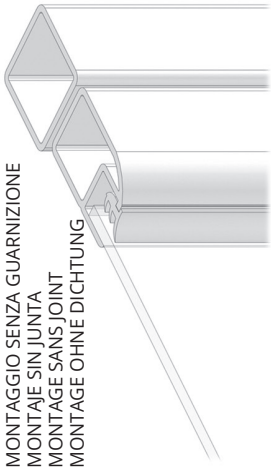

ASSEMBLY WITHOUT GASKET
MONTAGGIO SENZA GUARNIZIONE
MONTAJE SIN JUNTA
MONTAGE SANS JOINT
MONTAGE OHNE DICHTUNG

The reproduction of this catalogue is prohibited without authorization. We reserve the right to make changes to our products to enhance their features.

ASSEMBLY SYSTEM WITH SAFETY SWITCH
SISTEMI DI MONTAGGIO PORTA A DUE ANTE CON INTERRUTTORE DI SICUREZZA
SISTEMA DE MONTAJE CON INTERRUPTOR DE SEGURIDAD
SISTÈME DE MONTAGE INTERRUPTEUR DE SÉCURITÉ
MONTAGESYSTEM MIT SICHERHEITSSCHALTER

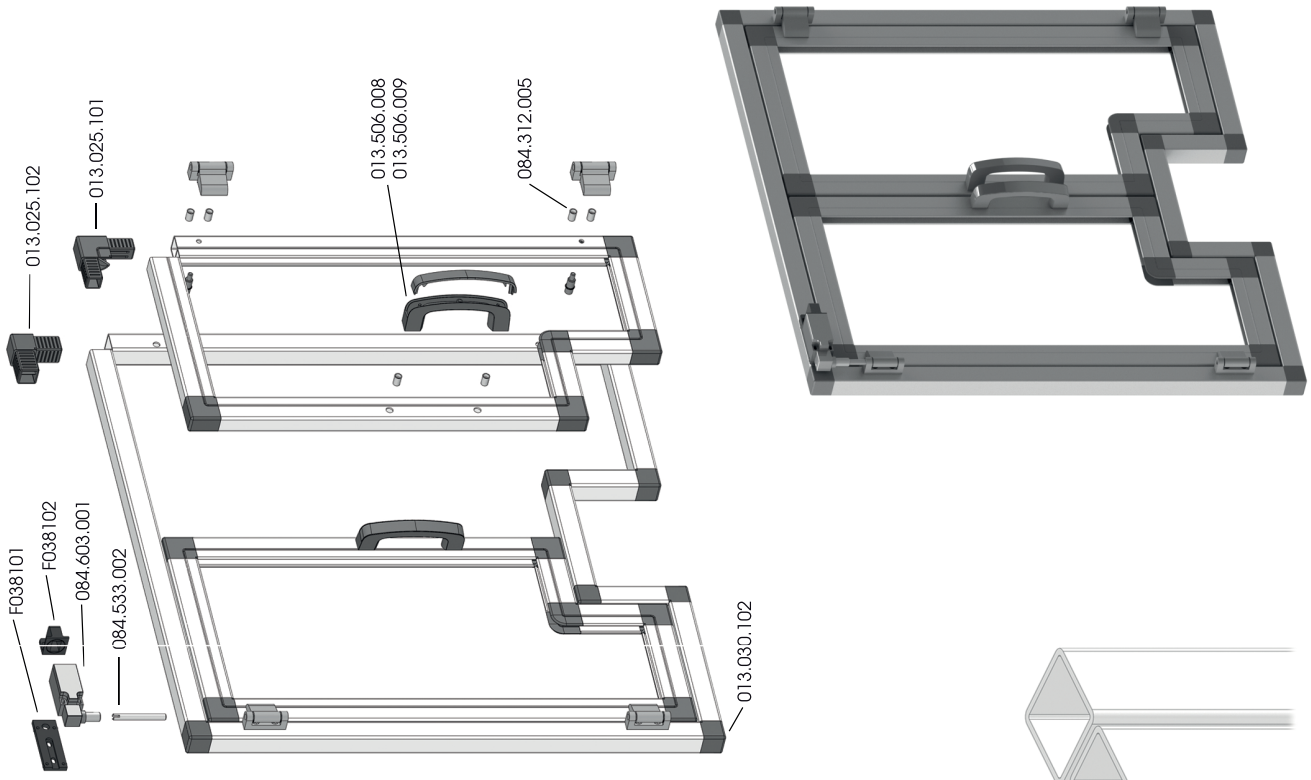

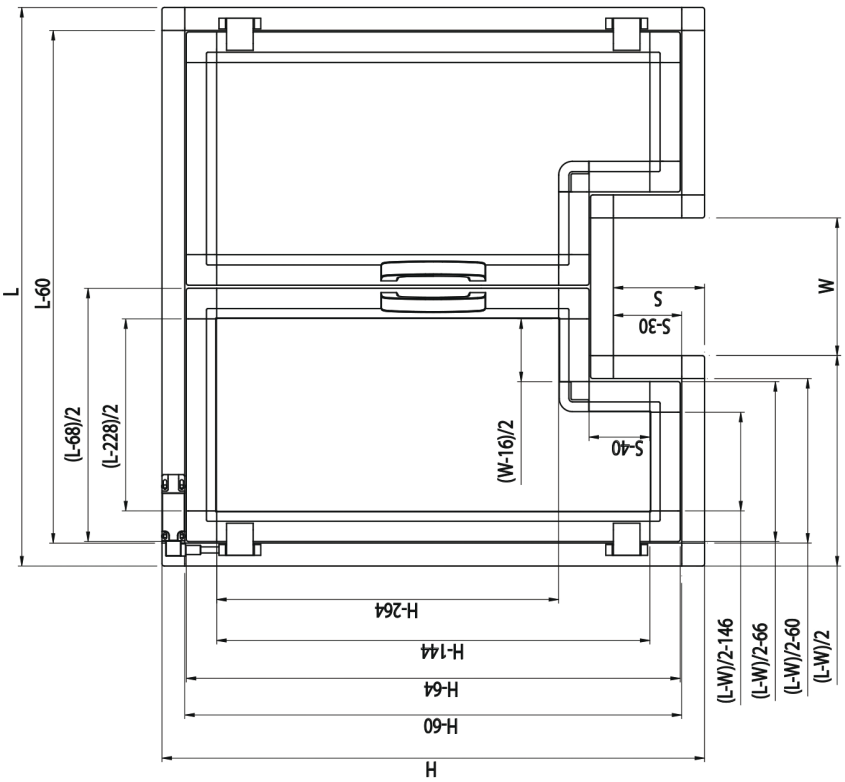

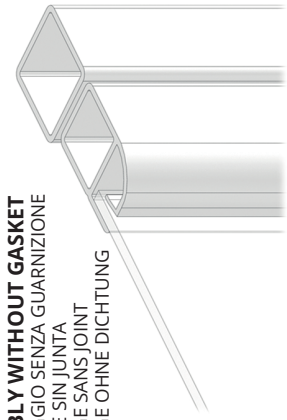

ASSEMBLY WITHOUT GASKET
MONTAGGIO SENZA GUARNIZIONE
MONTAJE SIN JUNTA
MONTAGE SANS JOINT
MONTAGE OHNE DICHTUNG

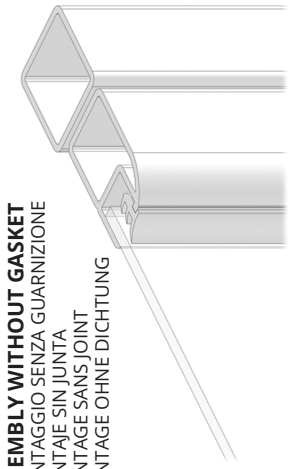

ASSEMBLY WITHOUT GASKET
MONTAGGIO SENZA GUARNIZIONE
MONTAJE SIN JUNTA
MONTAGE SANS JOINT
MONTAGE OHNE DICHTUNG

The reproduction of this catalogue is prohibited without authorization. We reserve the right to make changes to our products to enhance their features.

ASSEMBLY SYSTEM FOR SLIDING DOOR
SISTEMA DI MONTAGGIO PORTA SCORREVOLE
SISTEMA DE MONTAJE PARA PUERTA CORREDIZA
SISTÈME DE MONTAGE POUR PORTE COULISSANTE
MONTAGESYSTEM FÜR SCHIEBETÜR

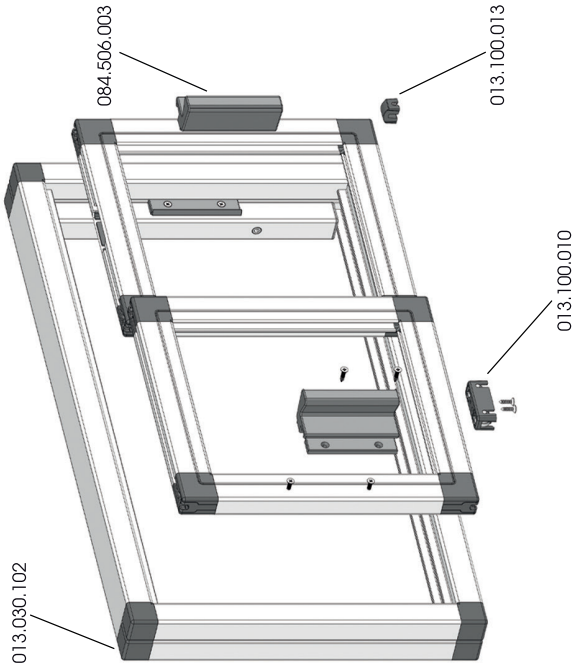

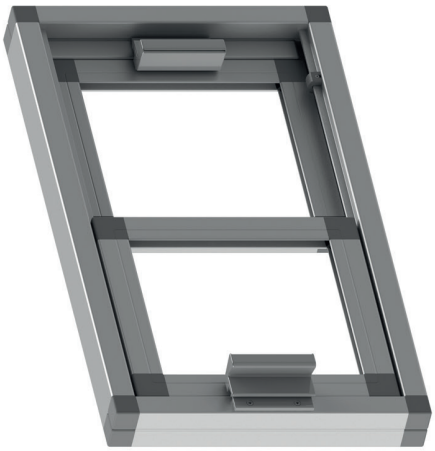

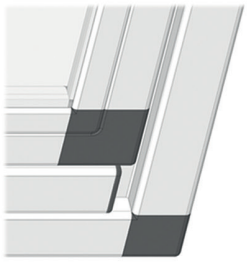

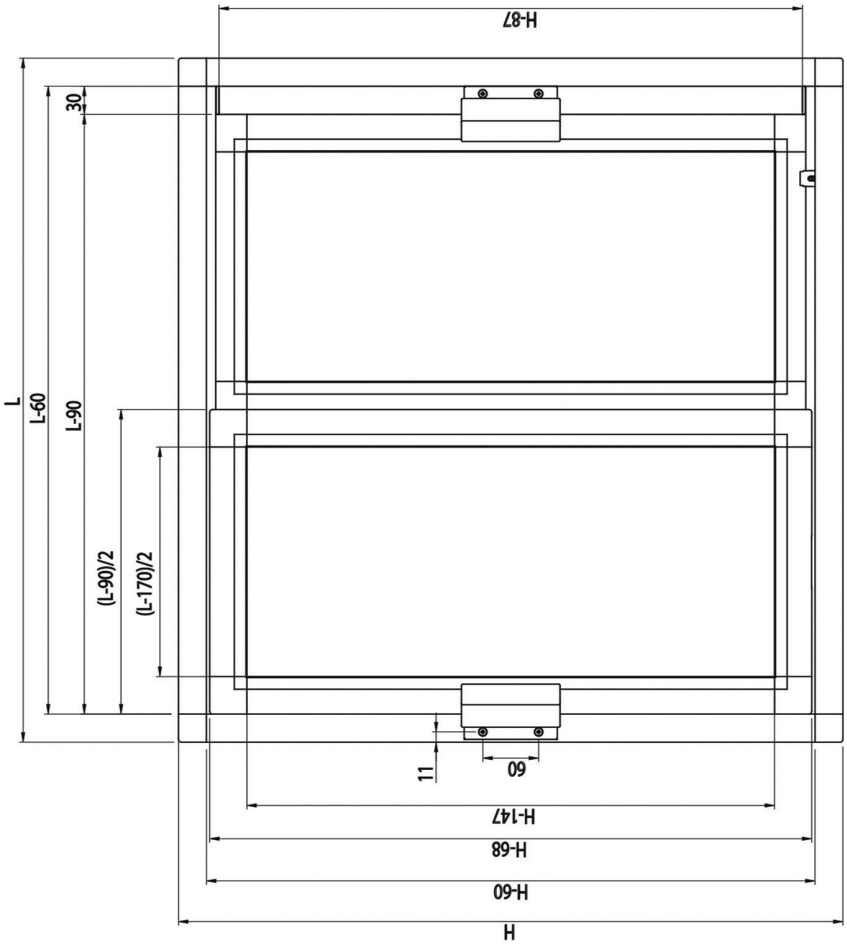

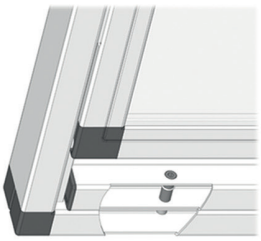

ASSEMBLY WITHOUT GASKET
MONTAGGIO SENZA GUARNIZIONE
MONTAJE SIN JUNTA
MONTAGE SANS JOINT
MONTAGE OHNE DICHTUNG

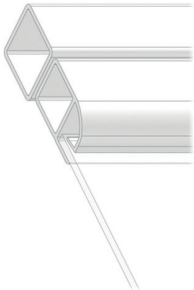

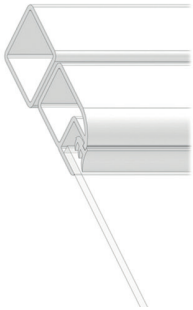

ASSEMBLY WITHOUT GASKET
MONTAGGIO SENZA GUARNIZIONE
MONTAJE SIN JUNTA
MONTAGE SANS JOINT
MONTAGE OHNE DICHTUNG

The reproduction of this catalogue is prohibited without authorization. We reserve the right to make changes to our products to enhance their features.

90° DOOR ASSEMBLY SYSTEM
SISTEMA DI MONTAGGIO SPORTELLO A 90°
SISTEMA DE MONTAJE PUERTA 90°
SISTÈME DE MONTAGE PORTE 90°
MONTAGESYSTEM TÜR 90°

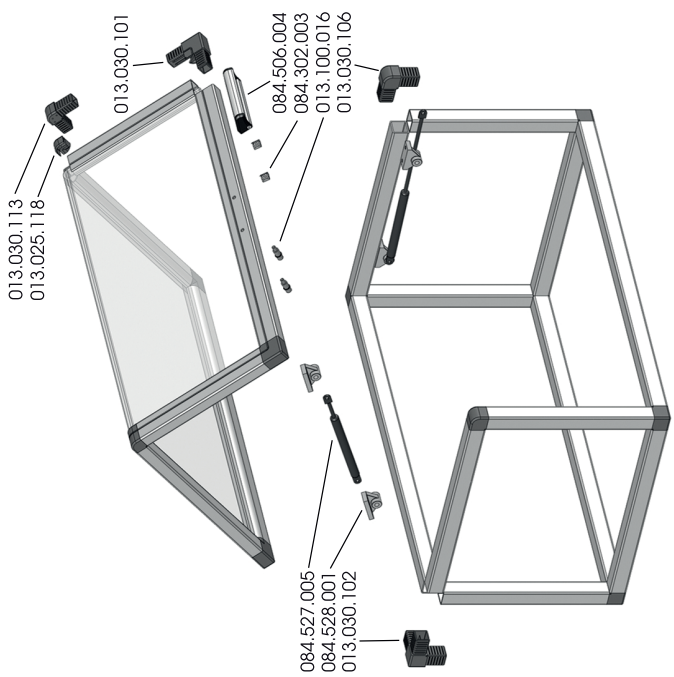

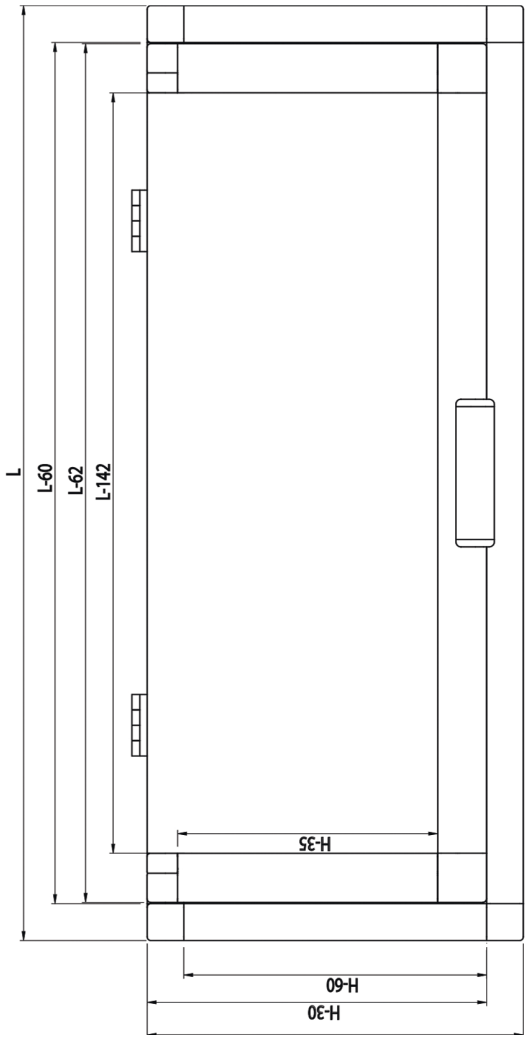

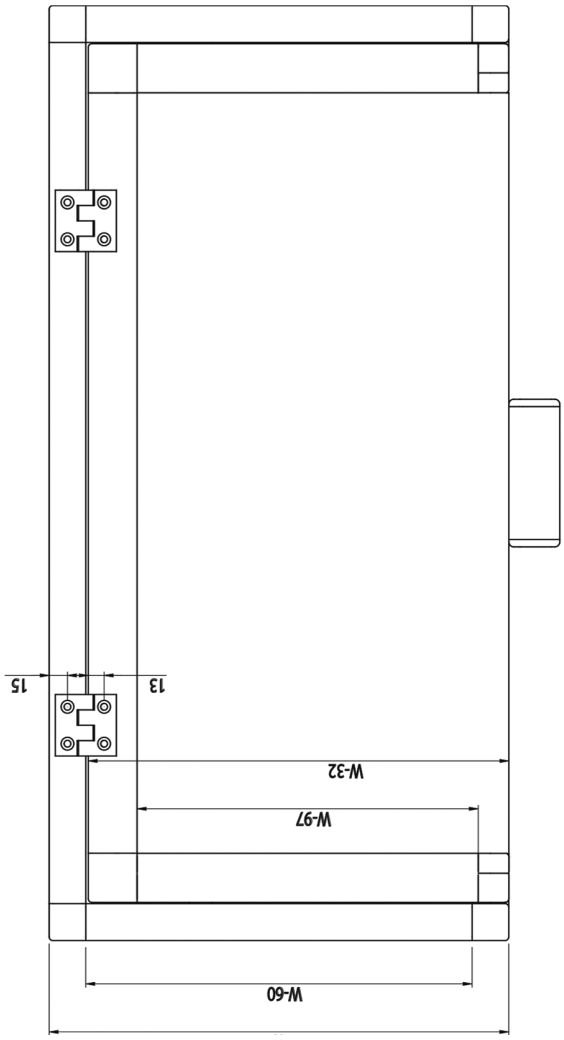

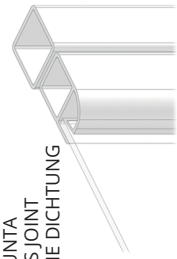

ASSEMBLY WITHOUT GASKET
MONTAGGIO SENZA GUARNIZIONE
MONTAJE SIN JUNTA
MONTAGE SANS JOINT
MONTAGE OHNE DICHTUNG

ASSEMBLY WITHOUT GASKET
MONTAGGIO SENZA GUARNIZIONE
MONTAJE SIN JUNTA
MONTAGE SANS JOINT
MONTAGE OHNE DICHTUNG

The reproduction of this catalogue is prohibited without authorization. We reserve the right to make changes to our products to enhance their features.

ASSEMBLY SYSTEM FOR FOLDING DOOR
SISTEMA DI MONTAGGIO PORTA SOFFIETTO
SISTEMA DE MONTAJE PARA PUERTA PLEGABLE
SISTÈME DE MONTAGE POUR PORTE PLIANTE
MONTAGESYSTEM FÜR FALTTÜR

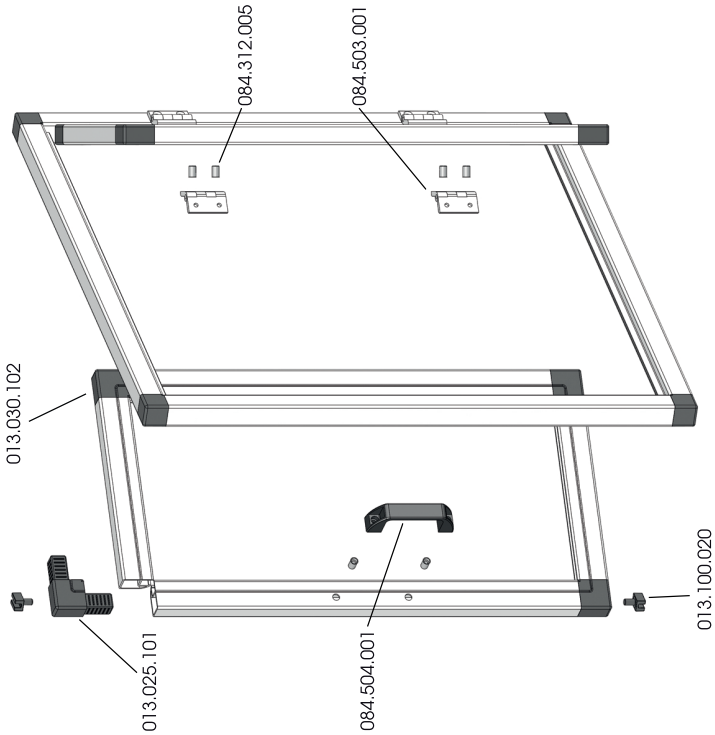

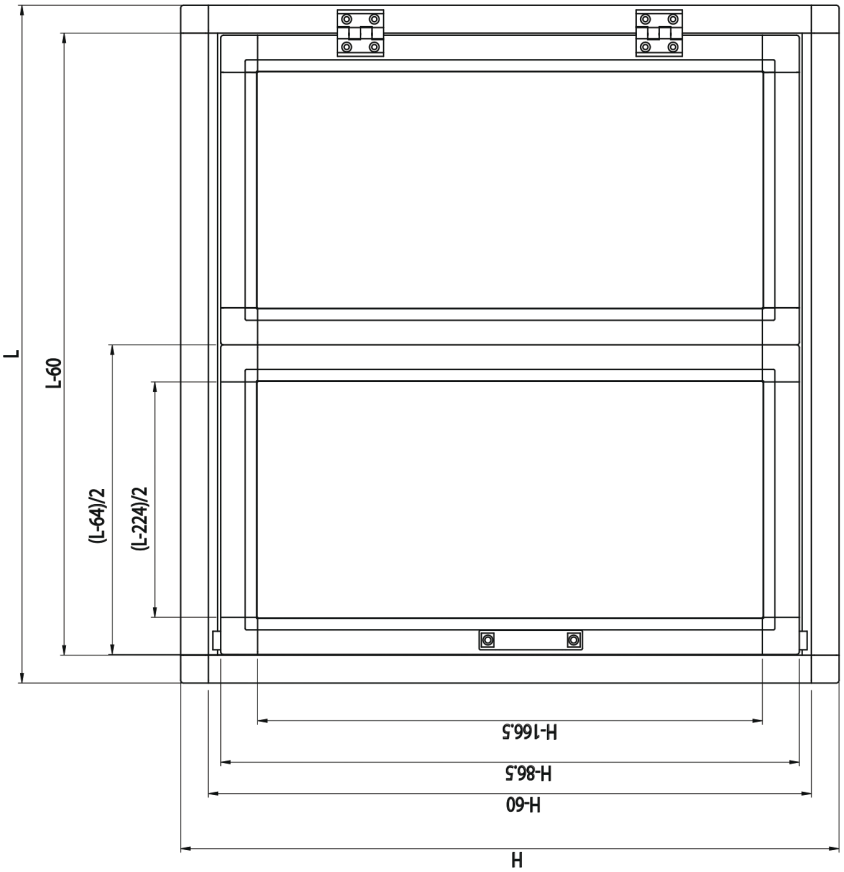

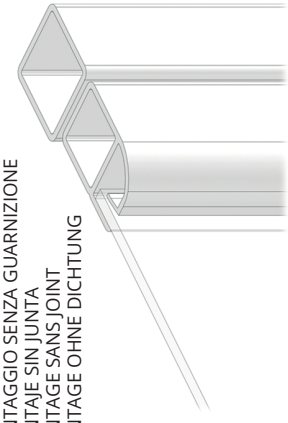

ASSEMBLY WITHOUT GASKET
MONTAGGIO SENZA GUARNIZIONE
MONTAJE SIN JUNTA
MONTAGE SANS JOINT
MONTAGE OHNE DICHTUNG

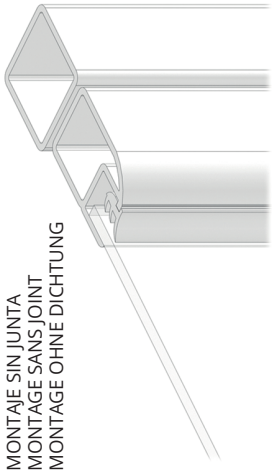

ASSEMBLY WITHOUT GASKET
MONTAGGIO SENZA GUARNIZIONE
MONTAJE SIN JUNTA
MONTAGE SANS JOINT
MONTAGE OHNE DICHTUNG

The reproduction of this catalogue is prohibited without authorization. We reserve the right to make changes to our products to enhance their features.

Alusic

FPZ SERIES

SERIE FPZ
SERIE FPZ
SÉRIE FPZ
REIHE FPZ

FPZ

pag.145

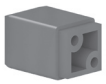
pag.151

pag.162

pag.163

SYMBOLS / SIMBOLI / SÍMBOLOS / SYMBOLES / SYMBOLE

Box
Scatola
Caja
Boîte
Schachtel

Load
Portata
Carga
Charge
Tragkraft

Stainless steel product
Prodotto in inox
Producto de acero inoxidable
Produit en acier inoxydab
Produkt aus rostfreiem Stahl

Patented product
Prodotto brevettato
Producto patentado
Produit breveté
Patentiertes Produkt

New product
Prodotto nuovo
Nuevo producto
Nouveau produit
Neues Produkt

The reproduction of this catalogue is prohibited without authorization. We reserve the right to make changes to our products to enhance their features.

EN

FPZ is a range of extruded aluminium profiles and accessories which is ideal to create aluminium machine frames and perimeter safety guards for industrial machinery in compliance with the Machinery Directive 2006/42/EC.

The range features joints with an aluminium core, making it particularly suitable for applications requiring structures with a high mechanical strength. The simple interlocking fastening system of the joints allows fast assembly, without compromising the look of the finished product.

IT

FPZ è la serie di profili in alluminio estruso e accessori ideale per la realizzazione di protezioni antinfortunistiche a bordo macchina e protezioni perimetrali per macchine industriali in conformità con la Direttiva macchine 2006/42/CE.

La linea è caratterizzata da giunti con anima in alluminio che la rendono particolarmente adatta alle applicazioni in cui occorre che la struttura abbia un'ottima resistenza meccanica. Il semplice fissaggio ad incastro dei giunti permette di eseguire il montaggio in tempi brevi senza trascurare l'estetica del prodotto finito.

ES

FPZ es la serie de perfiles de aluminio extruido y accesorios, perfecta para fabricar protecciones contra accidentes incorporadas en la máquina y protecciones perimetrales para máquinas industriales de conformidad con la Directiva 2006/42/CE relativa a las máquinas.

La línea se caracteriza por sus uniones con núcleo de aluminio que la hacen especialmente adecuada para aplicaciones en las que la estructura debe tener una resistencia mecánica excelente. La fijación por encaje de las uniones es sencilla y permite realizar el montaje en muy poco tiempo sin descuidar la estética del producto acabado.

FR

FPZ est la série de profilés en aluminium extrudé et d'accessoires, idéale pour la réalisation de carter de protection pour la prévention des accidents et de protections périmétriques pour les machines industrielles en conformité avec la Directive Machines 2006/42/CE.
La ligne se caractérise par des raccords avec âme en aluminium qui en font une ligne parfaitement adaptée aux applications pour lesquelles la structure doit offrir une résistance mécanique optimale. Une simple fixation des raccords par emboîtement permet de réaliser le montage très rapidement sans négliger l'esthétique du produit fini.

DE

FPZ ist die Serie aus stranggepressten Aluminiumprofilen und Zubehörteilen für Unfallschutzvorrichtungen an Maschinen und Schutzeinfassungen von Industriemaschinen nach der Maschinenrichtlinie 2006/42/EG.

Die Linie umfasst Verbindungsstücke mit Aluminiumkern, und ist daher vor allem für solche Anwendungen bestimmt, in denen hohe mechanische Beständigkeit verlangt wird. Die einfache Steckbefestigung der Verbindungsstücke erlaubt eine schnelle Montage ohne Abstriche an die Optik der fertigen Struktur.

ZERTIFIKAT ◆ CERTIFICATE ◆ 認證書 ◆ СЕРТИФИКАТ ◆ CERTIFICADO ◆ CERTIFICAT

TÜV SÜD Italia

CERTIFICATO

Nr. 50 100 6544 Rev.007

Certificati co-titolari collegati / *Connected to the sub-certificate:*
50 100 6544/1

SI ATTESTA CHE / *THIS IS TO CERTIFY THAT*

IL SISTEMA DI GESTIONE PER LA QUALITÀ DI
THE QUALITY MANAGEMENT SYSTEM OF

Alusic

ALUSIC S.r.l.

SEDE LEGALE E OPERATIVA:
REGISTERED OFFICE AND OPERATIONAL SITE:

VIA BOLOGNA 10/A
IT - 12084 MONDOVI' (CN)

SEDI OPERATIVE: **VEDI ALLEGATO 1** / *OPERATIONAL SITES: **SEE ANNEX 1***

È CONFORME AI REQUISITI DELLA NORMA
HAS BEEN FOUND TO COMPLY WITH THE REQUIREMENTS OF

UNI EN ISO 9001:2015

QUESTO CERTIFICATO È VALIDO PER IL SEGUENTE CAMPO DI APPLICAZIONE
THIS CERTIFICATE IS VALID FOR THE FOLLOWING SCOPE OF APPLICATION

Progettazione fabbricazione ed assemblaggio di recinzioni modulari in alluminio ed acciaio per la sicurezza industriale, nastri trasportatori ed altre strutture modulari in alluminio ed acciaio. Produzione e commercializzazione di profilati in alluminio, componenti ed accessori (IAF 17, 18, 29)

Design manufacture and assembling aluminium and steel modular shields for safety protection, conveyor belts and other aluminium and steel modular structures. Manufacture and trade of aluminium profiles, components and accessories (IAF 17, 18, 29)

Per l'Organismo di Certificazione
For the Certification Body
TÜV Italia S.r.l.

	Validità / *Validity*
Dal / From:	2022-10-29
Al / To:	2025-10-28

ACCREDIA
EA/IAF/IAQG/IL ACCREDITATO

SGQ N° 049A

Membro degli Accordi di Mutuo Riconoscimento EA, IAF e ILAC
Member of the EA, IAF and ILAC Mutual Recognition Agreements

Francesco Scariata
Direttore Divisione Business Assurance
Business Assurance Division Manager

Data emissione /
Issuing Date
2022-10-04

PRIMA CERTIFICAZIONE / *FIRST CERTIFICATION:* 2007-02-20

"LA VALIDITÀ DEL PRESENTE CERTIFICATO È SUBORDINATA A SORVEGLIANZA PERIODICA A 12 MESI E AL RIESAME COMPLETO DEL SISTEMA DI GESTIONE AZIENDALE CON PERIODICITÀ TRIENNALE"
"THE VALIDITY OF THE PRESENT CERTIFICATE DEPENDS ON THE ANNUAL SURVEILLANCE (EVERY 12 MONTHS) AND ON THE COMPLETE REVIEW OF COMPANY'S MANAGEMENT SYSTEM AFTER THREE YEARS"

TÜV Italia • Gruppo TÜV SÜD • Via Carducci 125, Pal. 23 • 20099 Sesto San Giovanni (MI) • Italia • www.tuvsud.com/it TÜV®

The reproduction of this catalogue is prohibited without authorization. We reserve the right to make changes to our products to enhance their features.

PROFILE FASTENING

FISSAGGIO DEI PROFILI / FIJACIÓN DE LOS PERFILES / FIXATION DES PROFILÉS / BEFESTIGUNG DER PROFILE

The fastenings between the various profiles use interlocking joints:

Il fissaggio tra i vari profili avviene tramite i giunti ad incastro:

La fijación entre los distintos perfiles se realiza mediante las uniones por encaje:

La fixation des différents profilés les uns aux autres s'effectue au moyen de joints à encastrement:

Die Befestigung zwischen den verschiedenen Profilen erfolgt mittels Steckverbindungen:

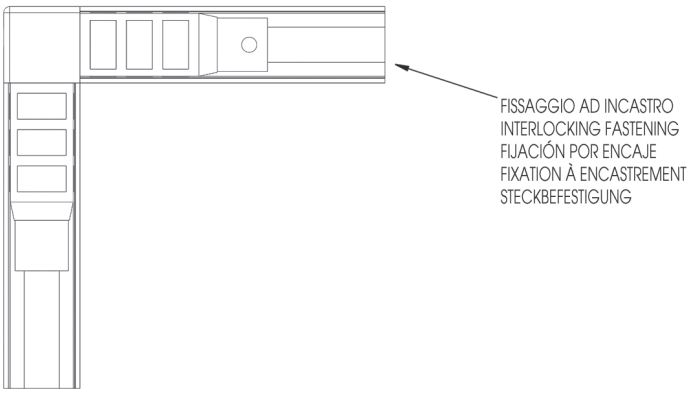

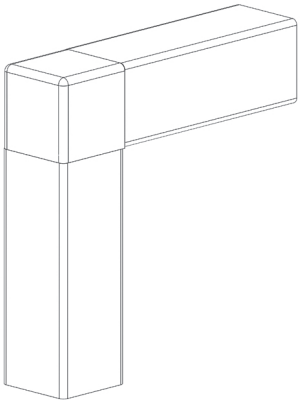

The reproduction of this catalogue is prohibited without authorization. We reserve the right to make changes to our products to enhance their features.

25x25

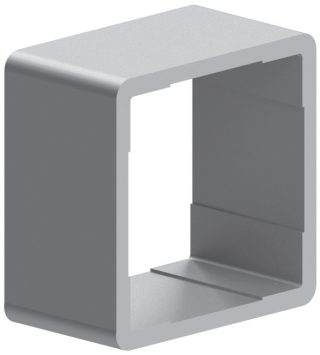

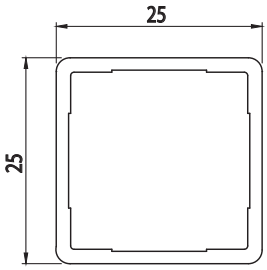

Cod	Ix cm⁴	Iy cm⁴	wx cm³	wy cm³	mm²	Kg/m
B25025A	1,37	1,37	1,10	1,10	149,06	0,40

Anodised aluminium
Alluminio anodizzato - Aluminio anodizado
Aluminium anodisé - Eloxiertes Aluminium
Natural colour
Colore naturale - Color natural - Couleur naturelle - Natürliche Farbe
L=6040 mm

B25025E elox anod. coating on request
A richiesta anod. elox B25025E
Sur demande anod. elox B25025E
Bajo solicitud, anod. Elox B25025E
Auf Anfrage eloxiert elox B25025E

Cap - Tappo - Tapòn - Embout - Abdeck

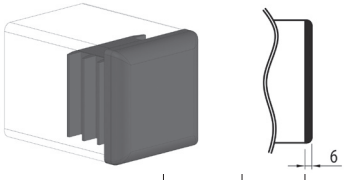

Cod	Mat	g	Col
C030125	PA	8	■

25x25

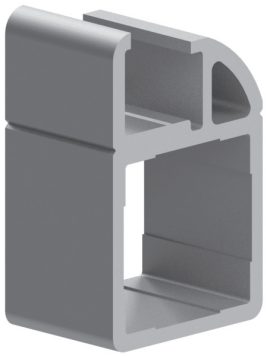

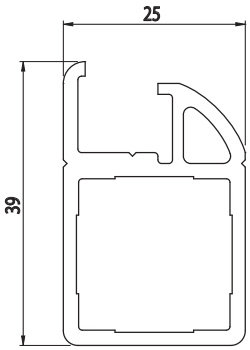

Cod	Ix cm⁴	Iy cm⁴	wx cm³	wy cm³	mm²	Kg/m
B25021A	2,21	3,61	1,77	1,72	268,06	0,72

Anodised aluminium
Alluminio anodizzato - Aluminio anodizado
Aluminium anodisé - Eloxiertes Aluminium
Natural colour
Colore naturale - Color natural - Couleur naturelle - Natürliche Farbe
L=6040 mm

B25021E elox anod. coating on request
A richiesta anod. elox B25021E
Sur demande anod. elox B25021E
Bajo solicitud, anod. Elox B25021E
Auf Anfrage eloxiert elox B25021E

The reproduction of this catalogue is prohibited without authorization. We reserve the right to make changes to our products to enhance their features.

25x25

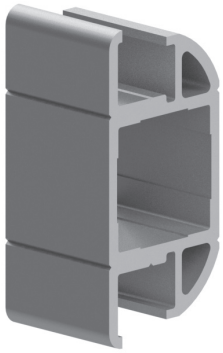

Cod	Ix cm⁴	Iy cm⁴	wx cm³	wy cm³	mm²	Kg/m
B25022A	2,89	7,59	2,31	2,92	360,22	0,97

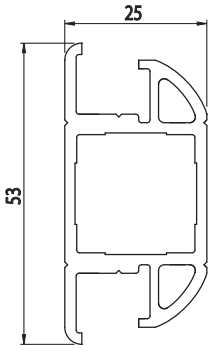

Anodised aluminium
Alluminio anodizzato - Aluminio anodizado
Aluminium anodisé - Eloxiertes Aluminium
Natural colour
Colore naturale - Color natural - Couleur naturelle - Natürliche Farbe
L=6040 mm

B25022E elox anod. coating on request
A richiesta anod. elox B25022E
Sur demande anod. elox B25022E
Bajo solicitud, anod. Elox B25022E
Auf Anfrage eloxiert elox B25022E

25x25

Cod	Ix cm⁴	Iy cm⁴	wx cm³	wy cm³	mm²	Kg/m
B25024A	0,16	0,75	0,13	0,75	113,34	0,31

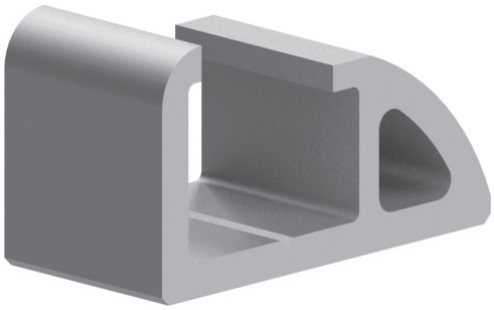

Anodised aluminium
Alluminio anodizzato - Aluminio anodizado
Aluminium anodisé - Eloxiertes Aluminium
Natural colour
Colore naturale - Color natural - Couleur naturelle - Natürliche Farbe
L=6040 mm

B25024E elox anod. coating on request
A richiesta anod. elox B25024E
Sur demande anod. elox B25024E
Bajo solicitud, anod. Elox B25024E
Auf Anfrage eloxiert elox B25024E

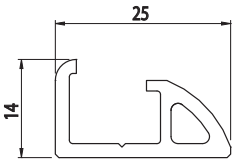

The reproduction of this catalogue is prohibited without authorization. We reserve the right to make changes to our products to enhance their features.

30x30

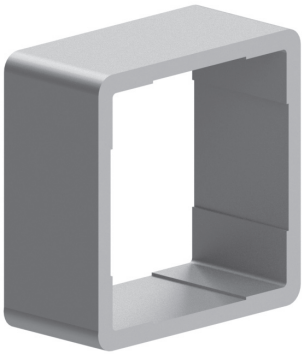

Cod	Ix cm⁴	Iy cm⁴	wx cm³	wy cm³	mm²	Kg/m
B30030A	2,84	2,84	1,89	1,89	214,65	0,58

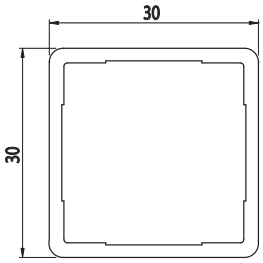

Anodised aluminium
Alluminio anodizzato - Aluminio anodizado
Aluminium anodisé - Eloxiertes Aluminium
Natural colour
Colore naturale - Color natural - Couleur naturelle - Natürliche Farbe
L=6040 mm

B30030E elox anod. coating on request
A richiesta anod. elox B30030E
Sur demande anod. elox B30030E
Bajo solicitud, anod. Elox B30030E
Auf Anfrage eloxiert elox B30030E

Cap - Tappo - Tapòn - Embout - Abdeck

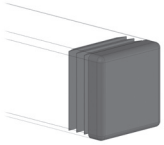

Cod	Mat	g	Col
C030130	PA	8	■

30x30

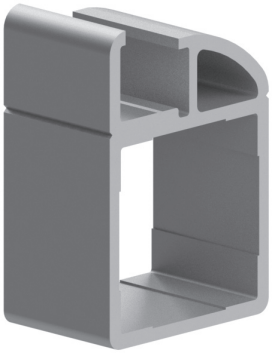

Cod	Ix cm⁴	Iy cm⁴	wx cm³	wy cm³	mm²	Kg/m
B30031A	3,79	5,87	1,92	3,90	314,64	0,85

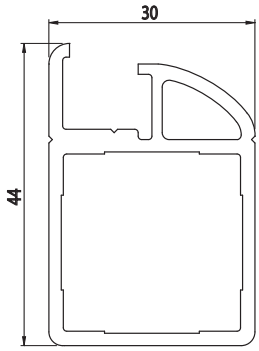

Anodised aluminium
Alluminio anodizzato - Aluminio anodizado
Aluminium anodisé - Eloxiertes Aluminium
Natural colour
Colore naturale - Color natural - Couleur naturelle - Natürliche Farbe
L=6040 mm

B30031E elox anod. coating on request
A richiesta anod. elox B30031E
Sur demande anod. elox B30031E
Bajo solicitud, anod. Elox B30031E
Auf Anfrage eloxiert elox B30031E

The reproduction of this catalogue is prohibited without authorization. We reserve the right to make changes to our products to enhance their features.

30x30

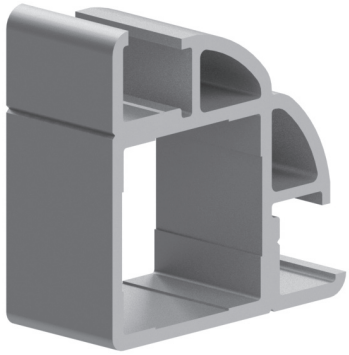

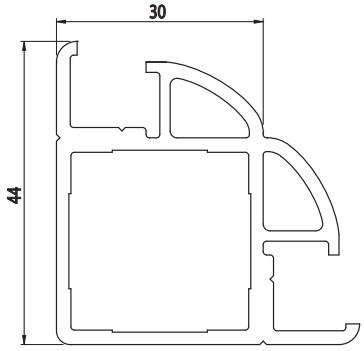

Cod	Ix cm⁴	Iy cm⁴	wx cm³	wy cm³	mm²	Kg/m
B30033A	7,34	7,34	3,67	3,67	414,32	1,12

Anodised aluminium
Alluminio anodizzato - Aluminio anodizado
Aluminium anodisé - Eloxiertes Aluminium
Natural colour
Colore naturale - Color natural - Couleur naturelle - Natürliche Farbe
L=6040 mm

B30033E elox anod. coating on request
A richiesta anod. elox B30033E
Sur demande anod. elox B30033E
Bajo solicitud, anod. Elox B30033E
Auf Anfrage eloxiert elox B30033E

30x30

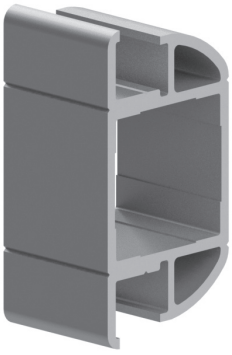

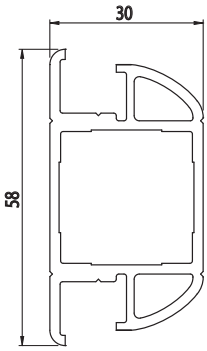

Cod	Ix cm⁴	Iy cm⁴	wx cm³	wy cm³	mm²	Kg/m
B30032A	4,81	11,48	3,21	3,83	414,63	1,13

Anodised aluminium
Alluminio anodizzato - Aluminio anodizado
Aluminium anodisé - Eloxiertes Aluminium
Natural colour
Colore naturale - Color natural - Couleur naturelle - Natürliche Farbe
L=6040 mm

B30032E elox anod. coating on request
A richiesta anod. elox B30032E
Sur demande anod. elox B30032E
Bajo solicitud, anod. Elox B30032E
Auf Anfrage eloxiert elox B30032E

The reproduction of this catalogue is prohibited without authorization. We reserve the right to make changes to our products to enhance their features.

30x30

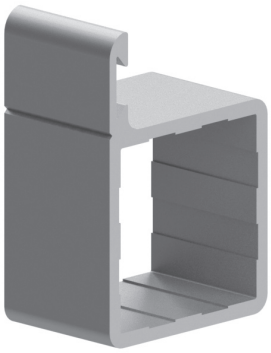

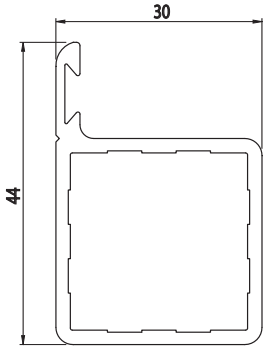

Cod	Ix cm⁴	Iy cm⁴	wx cm³	wy cm³	mm²	Kg/m
B30052A	4,23	3,35	2,33	1,98	250,56	0,68

Anodised aluminium
Alluminio anodizzato - Aluminio anodizado
Aluminium anodisé - Eloxiertes Aluminium
Natural colour
Colore naturale - Color natural - Couleur naturelle - Natürliche Farbe
L=6040 mm

B30052E elox anod. coating on request
A richiesta anod. elox B30052E
Sur demande anod. elox B30052E
Bajo solicitud, anod. Elox B30052E
Auf Anfrage eloxiert elox B30052E

30x30

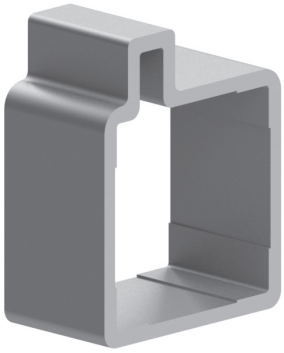

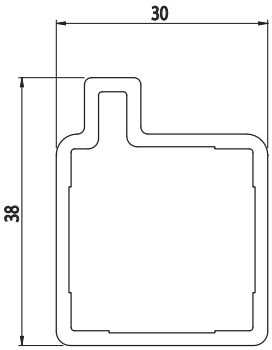

Cod	Ix cm⁴	Iy cm⁴	wx cm³	wy cm³	mm²	Kg/m
B30040A	3,99	2,94	2,10	1,96	242,49	0,65

Anodised aluminium
Alluminio anodizzato - Aluminio anodizado
Aluminium anodisé - Eloxiertes Aluminium
Natural colour
Colore naturale - Color natural - Couleur naturelle - Natürliche Farbe
L=6040 mm

B30040E elox anod. coating on request
A richiesta anod. elox B30040E
Sur demande anod. elox B30040E
Bajo solicitud, anod. Elox B30040E
Auf Anfrage eloxiert elox B30040E

The reproduction of this catalogue is prohibited without authorization. We reserve the right to make changes to our products to enhance their features.

30x30

Cod	Ix cm⁴	Iy cm⁴	wx cm³	wy cm³	mm²	Kg/m
B30050A	12,02	22,68	6,01	7,56	673,67	1,82

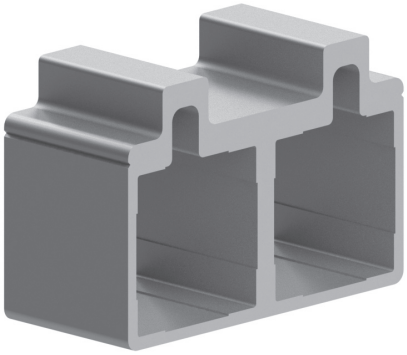

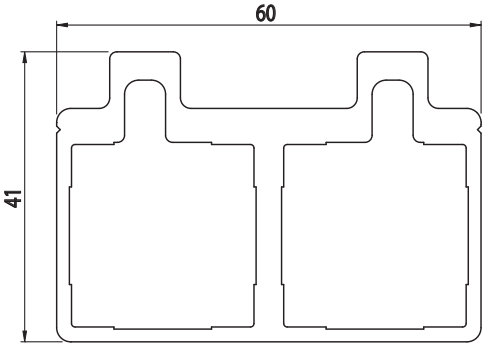

Anodised aluminium
Alluminio anodizzato - Aluminio anodizado
Aluminium anodisé - Eloxiertes Aluminium
Natural colour
Colore naturale - Color natural - Couleur naturelle - Natürliche Farbe
L=6040 mm

B30050E elox anod. coating on request
A richiesta anod. elox B30050E
Sur demande anod. elox B30050E
Bajo solicitud, anod. Elox B30050E
Auf Anfrage eloxiert elox B30050E

30x30

Cod	Ix cm⁴	Iy cm⁴	wx cm³	wy cm³	mm²	Kg/m
B30034A	0,19	1,17	0,13	0,78	131,95	0,36

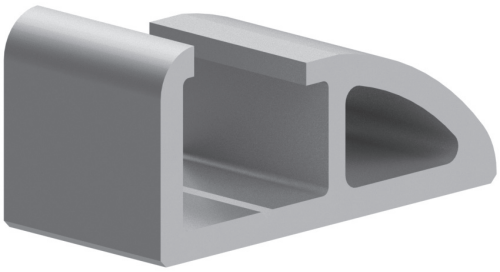

Anodised aluminium
Alluminio anodizzato - Aluminio anodizado
Aluminium anodisé - Eloxiertes Aluminium
Natural colour
Colore naturale - Color natural - Couleur naturelle - Natürliche Farbe
L=6040 mm

B30034E elox anod. coating on request
A richiesta anod. elox B30034E
Sur demande anod. elox B30034E
Bajo solicitud, anod. Elox B30034E
Auf Anfrage eloxiert elox B30034E

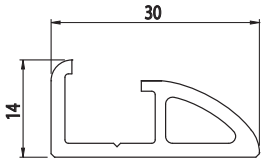

The reproduction of this catalogue is prohibited without authorization. We reserve the right to make changes to our products to enhance their features.

1-WAY JOINT Q25
GIUNTO 1 VIA Q25
EMPALME 1 VÍA Q25
JOINT 1 VOIE Q25
EIN-WEG-VERBINDER Q25

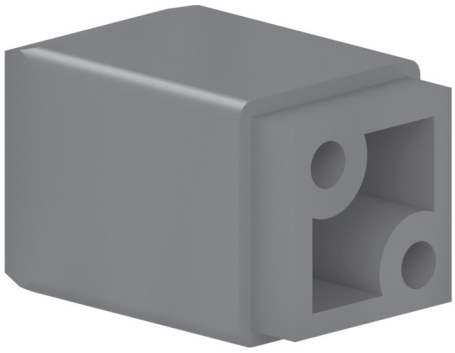

Cod	Note	g
F025101	For 25x25 profile, for use with F025201 - Per profilo 25x25, da usare con F025201 - Para perfil 25x25, usar con F025201 - Pour profilé 25x25, à utiliser avec F025201 - Für Profil 25x25, mit F025201 zu verwenden	15

Grey polyamide
Poliammide grigio
Poliamida color gris
Polyamide gris
Polyamid grau

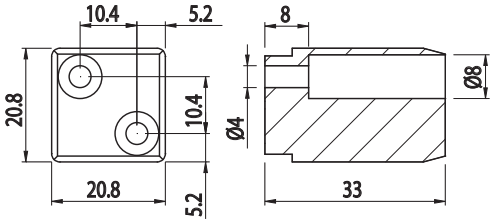

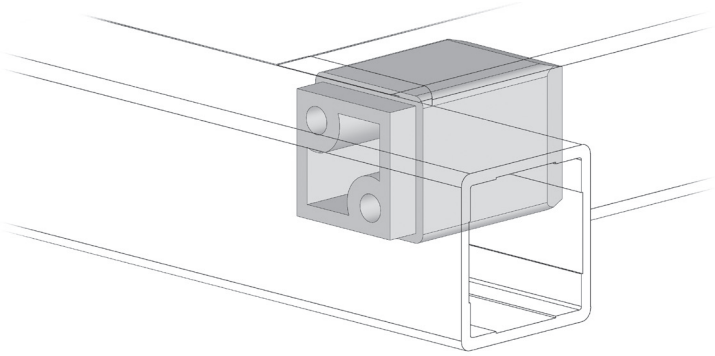

1-WAY JOINT SPACER Q25
DISTANZIALE GIUNTO 1 VIA Q25
DISTANCIADOR EMPALME 1 VÍA Q25
ÉCARTEUR JOINT 1 VOIE Q25
DISTANZSTÜCK EIN-WEGE-VERBINDER Q25

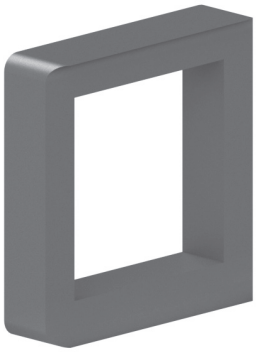

Cod	Note	g
F025201	For 25x25 profile, for use with F025101 - Per profilo 25x25, da usare con F025101 - Para perfil 25x25, usar con F025101 - Pour profilé 25x25, à utiliser avec F025101 - Für Profil 25x25, mit F025101 zu verwenden	5

Grey polyamide
Poliammide grigio
Poliamida color gris
Polyamide gris
Polyamid grau

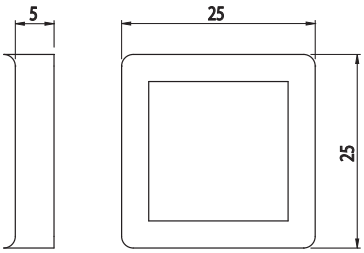

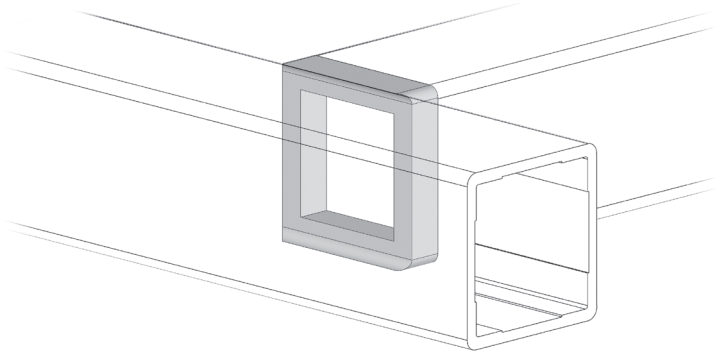

The reproduction of this catalogue is prohibited without authorization. We reserve the right to make changes to our products to enhance their features.

1-WAY JOINT Q25
GIUNTO 1 VIA Q25
EMPALME 1 VÍA Q25
JOINT 1 VOIE Q25
EIN-WEGE-VERBINDER Q25

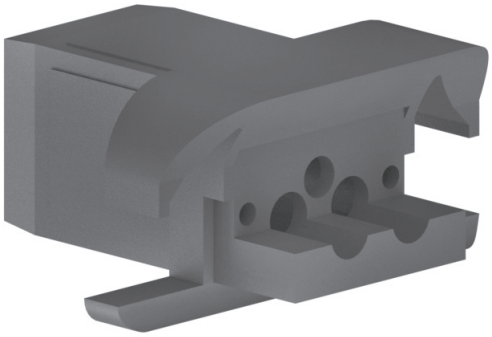

Cod	Note	g
F025107	For 25x25 profile B25022A - Per profilo 25x25 B25022A - Para perfil 25x25 B25022A - Pour profilé 25x25 B25022A - Für Profil 25x25 B25022A	20

Grey polyamide
Poliammide grigio
Poliamida color gris
Polyamide gris
Polyamid grau

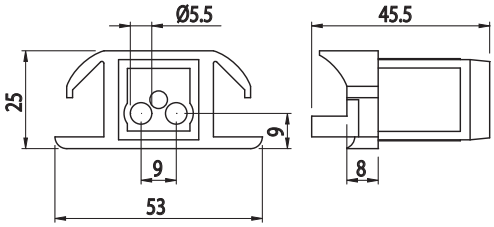

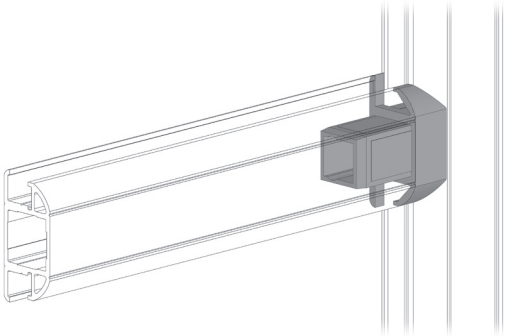

2-WAY JOINT Q25
GIUNTO 2 VIE Q25
EMPALME 2 VÍAS Q25
JOINT 2 VOIES Q25
ZWEI-WEGE-VERBINDER Q25

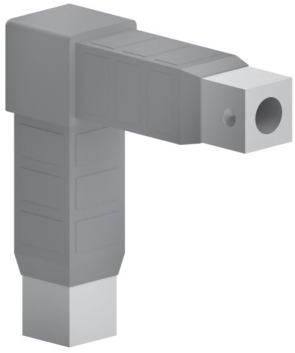

Cod	Note	g
F025102	Para perfil 25x25 - Per profilo 25x25 - For 25x25 profile - Pour profilé 25x25 - Für Profil 25x25	130

Grey polyamide
Poliammide grigio
Poliamida color gris
Polyamide gris
Polyamid grau

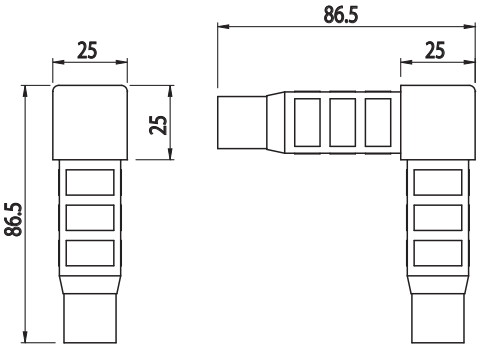

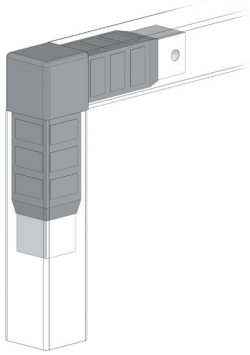

The reproduction of this catalogue is prohibited without authorization. We reserve the right to make changes to our products to enhance their features.

3-WAY JOINT Q25
GIUNTO 3 VIE Q25
EMPALME 3 VÍAS Q25
JOINT 3 VOIES Q25
DREI-WEGE-VERBINDER Q25

Cod	Note	g
F025103	For 25x25 profile - Per profilo 25x25 - Para perfil 25x25 - Pour profilé 25x25 - Für Profil 25x25	170

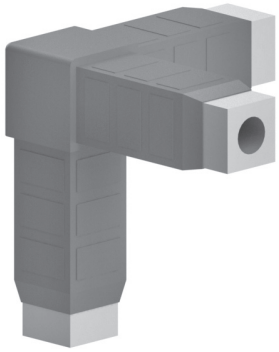

Grey polyamide
Poliammide grigio
Poliamida color gris
Polyamide gris
Polyamid grau

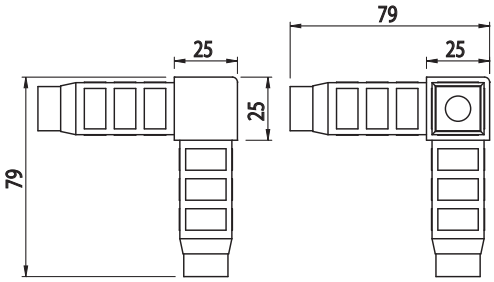

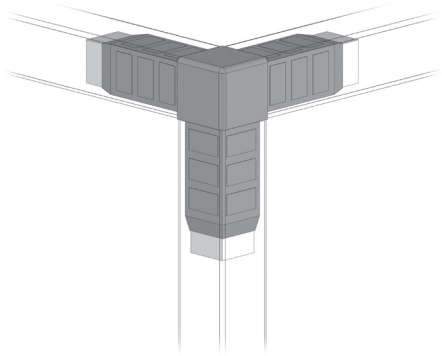

2-WAY JOINT Q25
GIUNTO 2 VIE Q25
EMPALME 2 VÍAS Q25
JOINT 2 VOIES Q25
ZWEI-WEGE-VERBINDER Q25

Cod	Note	g
F025105	For 25x25 profile with integrated frame - Per profilo 25x25 con cornice integrata - Para perfil 25x25 con marco integrado - Pour profilé 25x25 avec cadre intégré - Für Profil 25x25 mit integriertem Rahmen	135

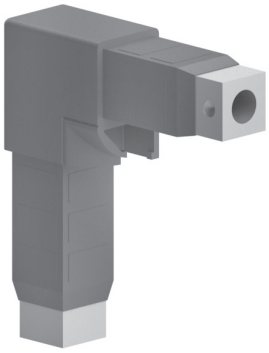

Grey polyamide
Poliammide grigio
Poliamida color gris
Polyamide gris
Polyamid grau

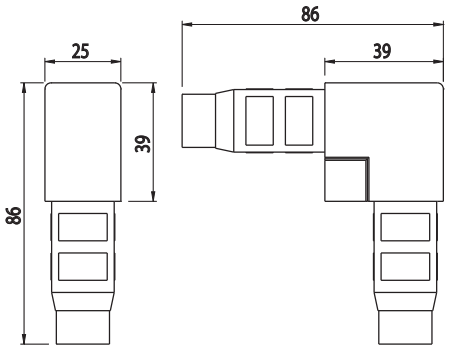

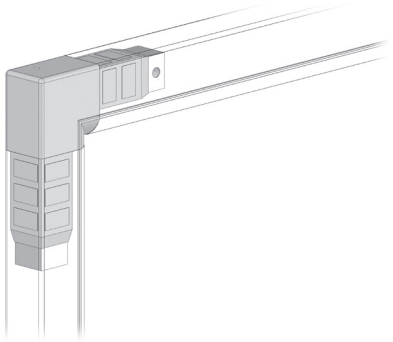

The reproduction of this catalogue is prohibited without authorization. We reserve the right to make changes to our products to enhance their features.

2-WAY JOINT Q25
GIUNTO 2 VIE Q25
EMPALME 2 VÍAS Q25
JOINT 2 VOIES Q25
ZWEI-WEGE-VERBINDER Q25

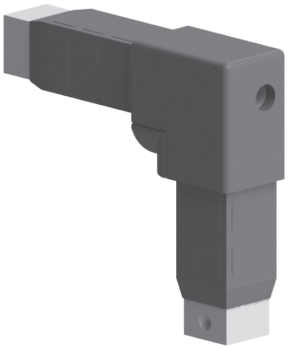

Cod	Note	g
T025105SX	For 25x25 profile with integrated frame and bellows - Per profilo 25x25 con cornice integrata e soffietto - Para perfil 25x25 con marco integrado y fuelle - Pour profilé 25x25 avec cadre intégré et soufflet - Für Profil 25x25 mit integriertem Rahmen und Falttür	135

Grey polyamide
Poliammide grigio
Poliamida color gris
Polyamide gris
Polyamid grau

Upon request
Su richiesta
A pedido
Sur demande
Auf Anfrage

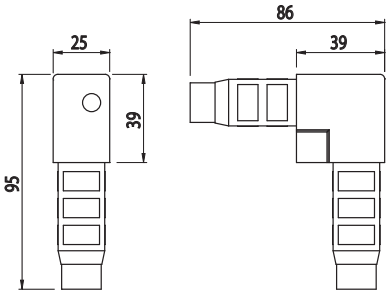

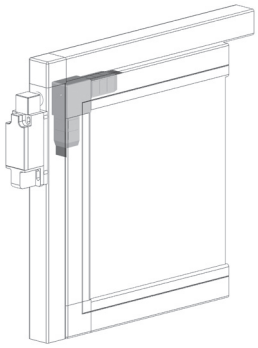

2-WAY JOINT Q25
GIUNTO 2 VIE Q25
EMPALME 2 VÍAS Q25
JOINT 2 VOIES Q25
ZWEI-WEGE-VERBINDER Q25

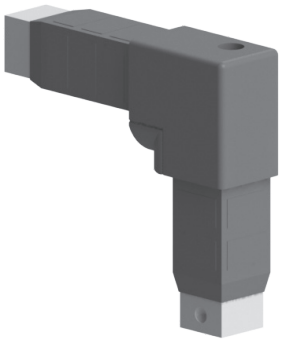

Cod	Note	g
T025105DX	For 25x25 profile with integrated frame and bellows - Per profilo 25x25 con cornice integrata e soffietto - Para perfil 25x25 con marco integrado y fuelle - Pour profilé 25x25 avec cadre intégré et soufflet - Für Profil 25x25 mit integriertem Rahmen und Falttür	135

Grey polyamide
Poliammide grigio
Poliamida color gris
Polyamide gris
Polyamid grau

Upon request
Su richiesta
A pedido
Sur demande
Auf Anfrage

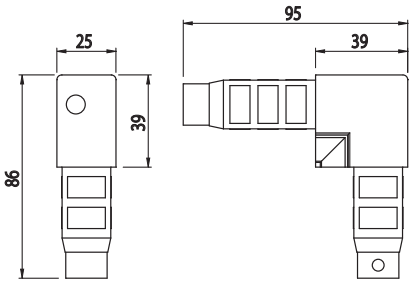

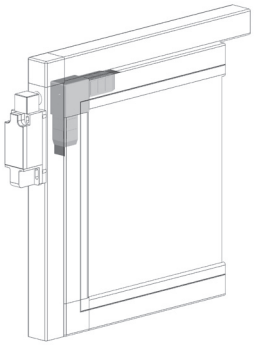

The reproduction of this catalogue is prohibited without authorization. We reserve the right to make changes to our products to enhance their features.

ROUNDED 2-WAY JOINT Q25
GIUNTO 2 VIE Q25 ARROTONDATO
EMPALME 2 VÍAS Q25 REDONDEADO
JOINT 2 VOIES Q25 ARRONDI
ZWEI-WEGE-VERBINDER Q25 ABGERUNDET

Cod	Note	g
F025115	For 25x25 profile - Per profilo 25x25 - Para perfil 25x25 - Pour profilé 25x25 - Für Profil 25x25	120

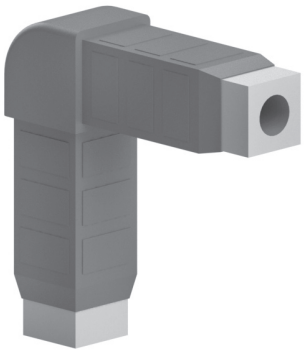

Grey polyamide
Poliammide grigio
Poliamida color gris
Polyamide gris
Polyamid grau

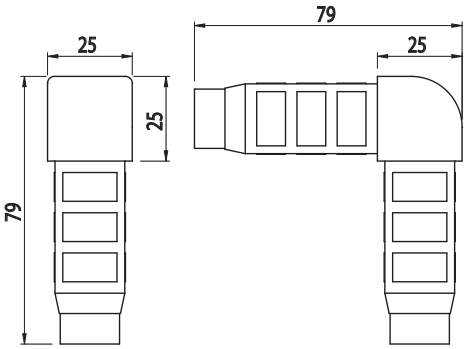

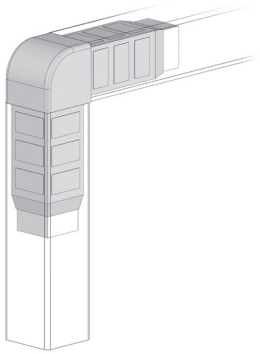

45° 2-WAY JOINT Q25
GIUNTO 2 VIE Q25 45°
EMPALME 2 VÍAS Q25 45°
JOINT 2 VOIES Q25 45°
ZWEI-WEGE-VERBINDER Q25 45°

Cod	Note	g
F025145	For 25x25 profile - Per profilo 25x25 - Para perfil 25x25 - Pour profilé 25x25 - Für Profil 25x25	140

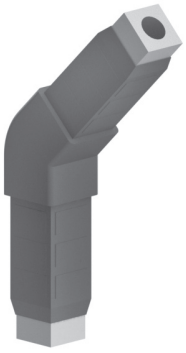

Grey polyamide
Poliammide grigio
Poliamida color gris
Polyamide gris
Polyamid grau

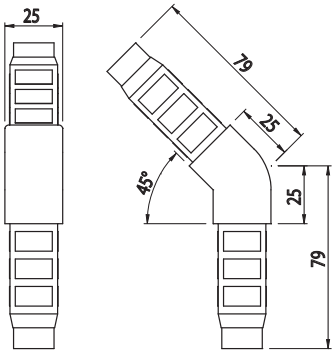

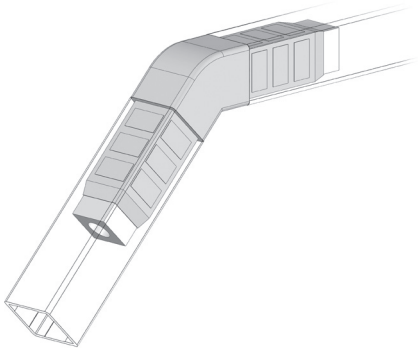

The reproduction of this catalogue is prohibited without authorization. We reserve the right to make changes to our products to enhance their features.

1-WAY JOINT Q30
GIUNTO 1 VIA Q30
EMPALME 1 VÍA Q30
JOINT 1 VOIE Q30
EIN-WEGE-VERBINDER Q30

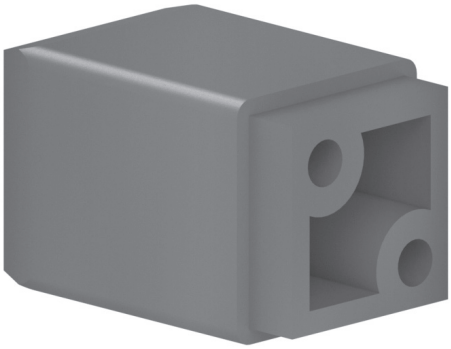

Cod	Note	g
F030101	For 30x30 profile, for use with F030201 - Per profilo 30x30, da usare con F030201 - Para perfil 30x30, usar con F030201 - Pour profilé 30x30, à utiliser avec F030201 - Für Profil 30x30, mit F030201 zu verwenden	18

Grey polyamide
Poliammide grigio
Poliamida color gris
Polyamide gris
Polyamid grau

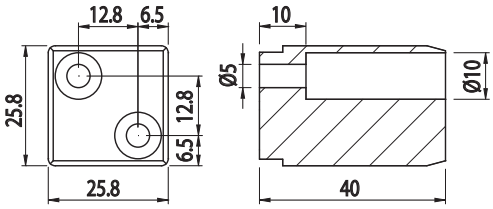

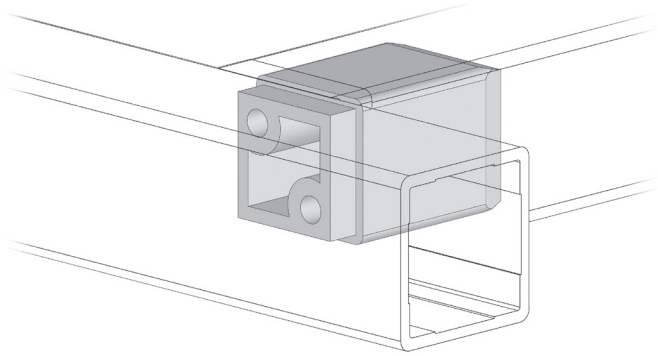

1-WAY JOINT SPACER Q30
DISTANZIALE GIUNTO 1 VIA Q30
DISTANCIADOR EMPALME 1 VÍA Q30
ÉCARTEUR JOINT 1 VOIE Q30
DISTANZSTÜCK EIN-WEGE-VERBINDER Q30

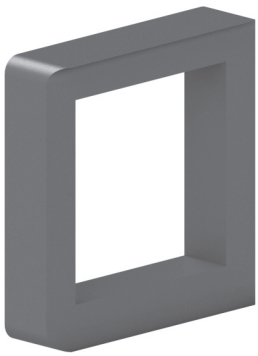

Cod	Note	g
F030201	For 30x30 profile, for use with F030101 - Per profilo 30x30, da usare con F030101 - Para perfil 30x30, usar con F030101 - Pour profilé 30x30, à utiliser avec F030101 - Für Profil 30x30, mit F030101 zu verwenden	6

Grey polyamide
Poliammide grigio
Poliamida color gris
Polyamide gris
Polyamid grau

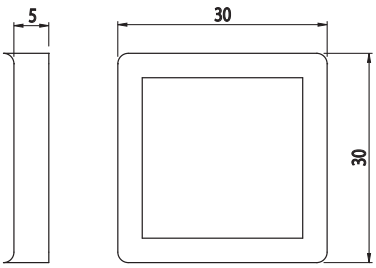

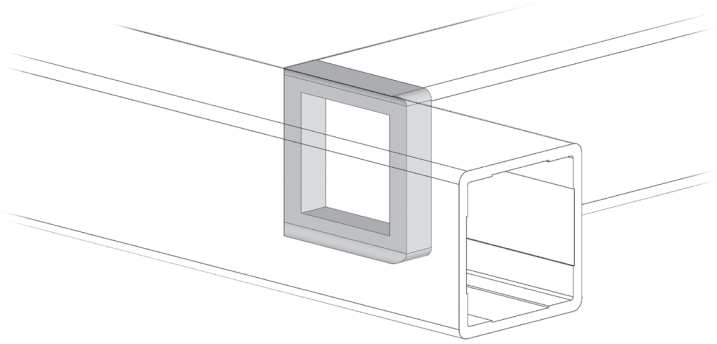

The reproduction of this catalogue is prohibited without authorization. We reserve the right to make changes to our products to enhance their features.

1-WAY JOINT Q30
GIUNTO 1 VIA Q30
EMPALME 1 VÍA Q30
JOINT 1 VOIE Q30
EIN-WEGE-VERBINDER Q30

Cod	Note	g
F030107	Per profilo 30x30 B30032A - For 30x30 profile B30032A - Para perfil 30x30 B30032A - Pour profilé 30x30 B30032A - Für Profil 30x30 B30032A	25

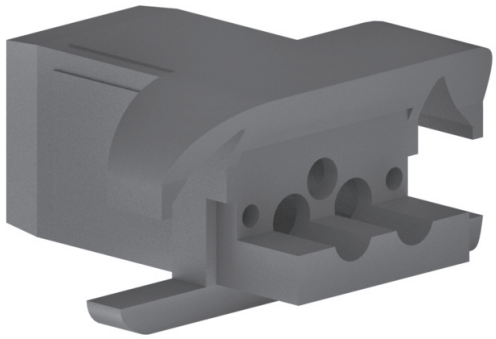

Grey polyamide
Poliammide grigio
Poliamida color gris
Polyamide gris
Polyamid grau

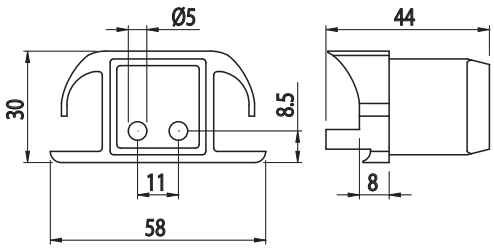

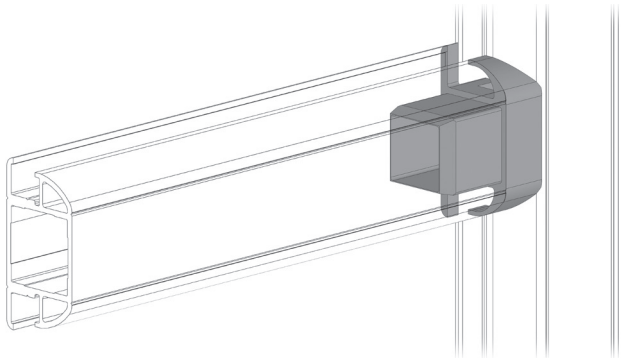

2-WAY JOINT Q30
GIUNTO 2 VIE Q30
EMPALME 2 VÍAS Q30
JOINT 2 VOIES Q30
ZWEI-WEGE-VERBINDER Q30

Cod	Note	g
F030102	For 30x30 profile - Per profilo 30x30 - Para perfil 30x30 - Pour profilé 30x30 - Für Profil 30x30	190

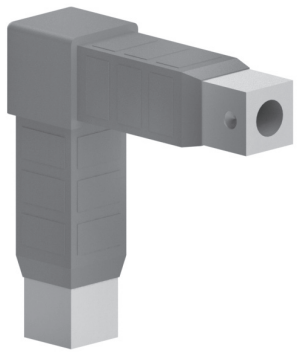

Grey polyamide
Poliammide grigio
Poliamida color gris
Polyamide gris
Polyamid grau

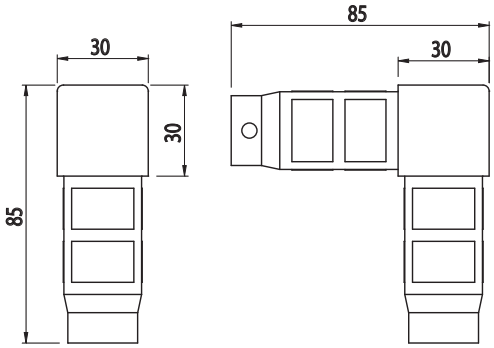

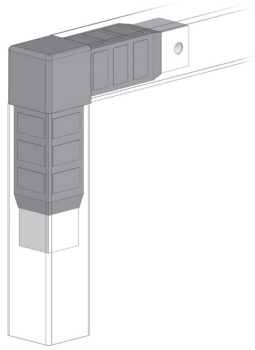

The reproduction of this catalogue is prohibited without authorization. We reserve the right to make changes to our products to enhance their features.

3-WAY JOINT Q30
GIUNTO 3 VIE Q30
EMPALME 3 VÍAS Q30
JOINT 3 VOIES Q30
DREI-WEGE-VERBINDER Q30

Cod	Note	g
F030103	For 30x30 profile - Per profilo 30x30 - Para perfil 30x30 - Pour profilé 30x30 - Für Profil 30x30	230

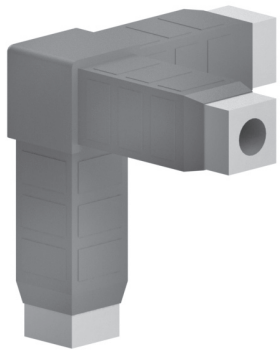

Grey polyamide
Poliammide grigio
Poliamida color gris
Polyamide gris
Polyamid grau

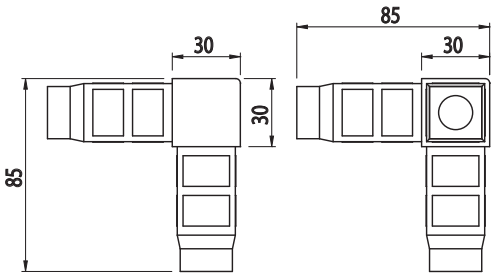

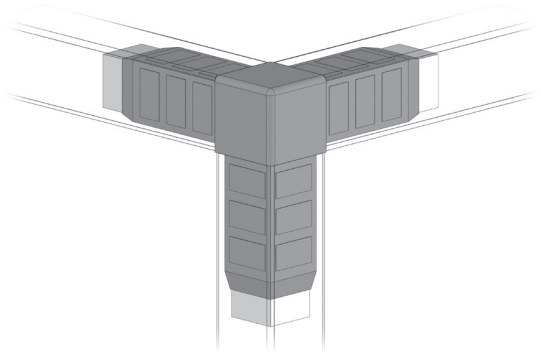

ROUNDED 2-WAY JOINT Q30
GIUNTO 2 VIE Q30 ARROTONDATO
EMPALME 2 VÍAS Q30 REDONDEADO
JOINT 2 VOIES Q30 ARRONDI
ZWEI-WEGE-VERBINDER Q30 ABGERUNDET

Cod	Note	g
F030115	For 30x30 profile - Per profilo 30x30 - Para perfil 30x30 - Pour profilé 30x30 - Für Profil 30x30	170

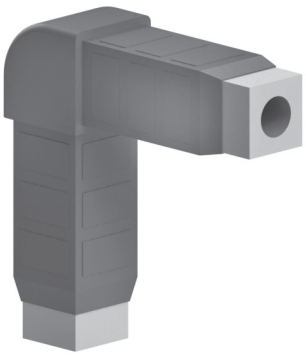

Grey polyamide
Poliammide grigio
Poliamida color gris
Polyamide gris
Polyamid grau

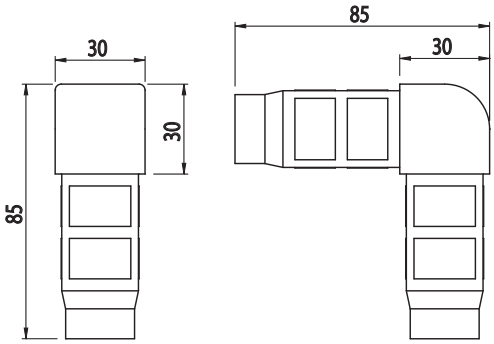

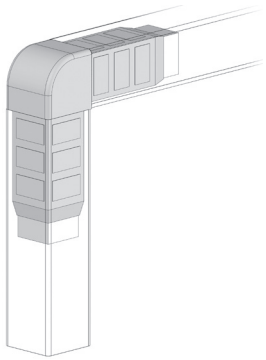

The reproduction of this catalogue is prohibited without authorization. We reserve the right to make changes to our products to enhance their features.

45° 2-WAY JOINT Q30
GIUNTO 2 VIE Q30 45°
EMPALME 2 VÍAS Q30 45°
JOINT 2 VOIES Q30 45°
ZWEI-WEGE-VERBINDER Q30 45°

Cod	Note	g
F030145	For 30x30 profile - Per profilo 30x30 - Para perfil 30x30 - Pour profilé 30x30 - Für Profil 30x30	190

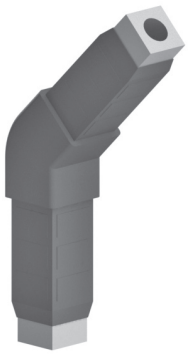

Grey polyamide
Poliammide grigio
Poliamida color gris
Polyamide gris
Polyamid grau

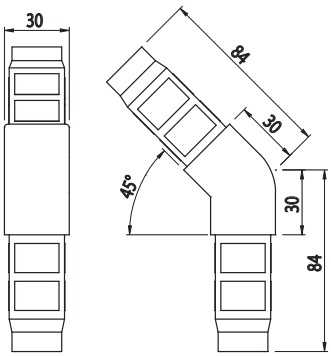

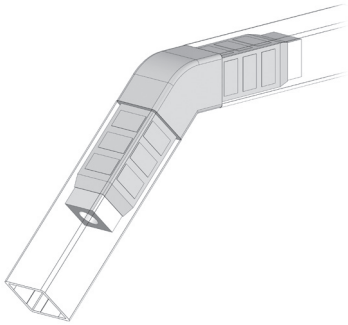

2-WAY FRAME Q25
CORNICE 2 VIE Q25
MARCO 2 VÍAS Q25
CADRE 2 VOIES Q25
ZWEI-WEGE-RAHMEN Q25

Cod	Note	g
F025290	For 25x25 profile - Per profilo 25x25 - Para perfil 25x25 - Pour profilé 25x25 - Für Profil 25x25	10

Grey polyamide
Poliammide grigio
Poliamida color gris
Polyamide gris
Polyamid grau

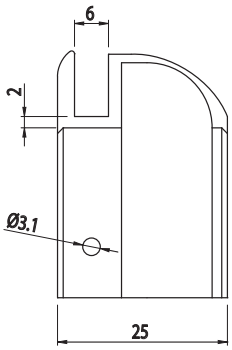

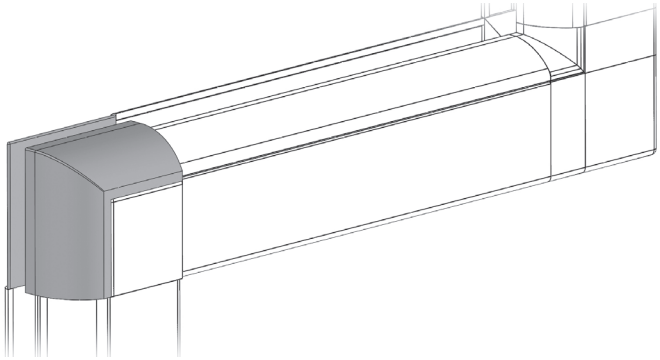

The reproduction of this catalogue is prohibited without authorization. We reserve the right to make changes to our products to enhance their features.

ROUNDED 2-WAY FRAME Q25
CORNICE 2 VIE Q25 ARROTONDATO
MARCO 2 VÍAS Q25 REDONDEADO
CADRE 2 VOIES Q25 ARRONDI
ZWEI-WEGE-RAHMEN Q25 ABGERUNDET

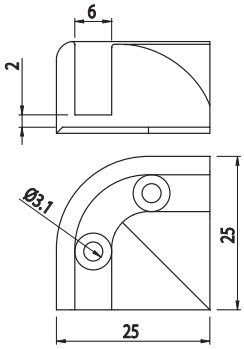

Cod	Note	g
F025215	For 25x25 profile with F025115 joint - Per profilo 25x25 con giunto F025115 - Para perfil 25x25 con unión F025115 - Pour profilé 25x25 avec joint F025115 - Für Profil 25x25 mit Verbinder F025115	6

Grey polyamide
Poliammide grigio
Poliamida color gris
Polyamide gris
Polyamid grau

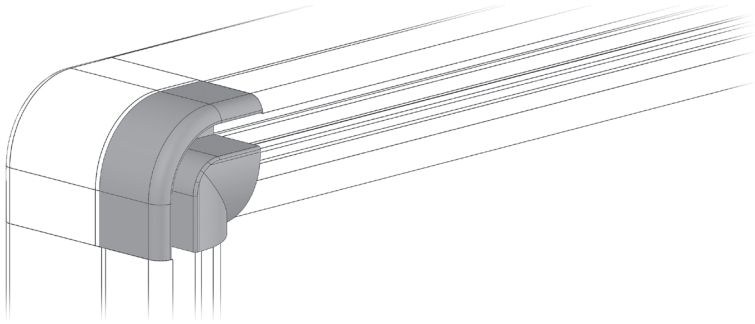

45° 2-WAY FRAME Q25
CORNICE 2 VIE Q25 45°
MARCO 2 VÍAS Q25 45°
CADRE 2 VOIES Q25 45°
ZWEI-WEGE-RAHMEN Q25 45°

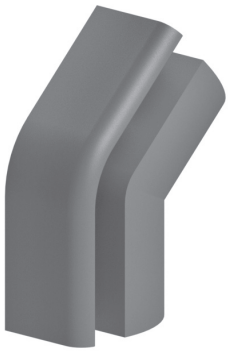

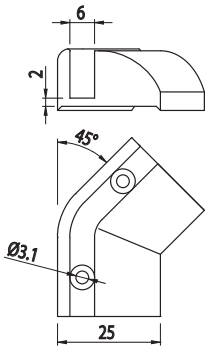

Cod	Note	g
F025245	For 25x25 profile with F025145 joint - Per profilo 25x25 con giunto F025145 - Para perfil 25x25 con unión F025145 - Pour profilé 25x25 avec joint F025145 - Für Profil 25x25 mit Verbinder F025145	6

Grey polyamide
Poliammide grigio
Poliamida color gris
Polyamide gris
Polyamid grau

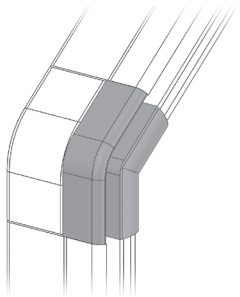

The reproduction of this catalogue is prohibited without authorization. We reserve the right to make changes to our products to enhance their features.

2-WAY FRAME Q30
CORNICE 2 VIE Q30
MARCO 2 VÍAS Q30
CADRE 2 VOIES Q30
ZWEI-WEGE-RAHMEN Q30

Cod	Note	g
F030290	For 30x30 profile - Per profilo 30x30 - Para perfil 30x30 - Pour profilé 30x30 - Für Profil 30x30	8

Grey polyamide
Poliammide grigio
Poliamida color gris
Polyamide gris
Polyamid grau

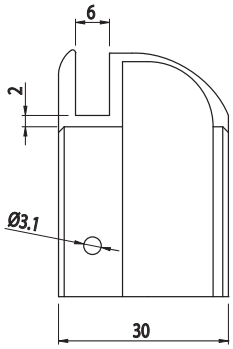

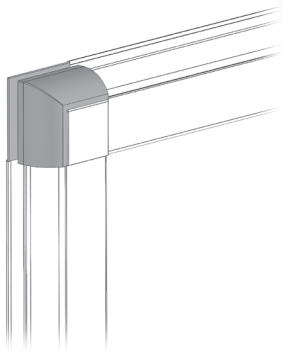

RIGHT-HAND COLLAR Q30
COLLARE DESTRO Q30
ABRAZADERA DERECHA Q30
COLLIER DROIT Q30
ADAPTER FÜR STUFENFREIE VERBINDUNGEN RECHTS Q30

Cod	Note	g
F030231	For 30x30 profile - Per profilo 30x30 - Para perfil 30x30 - Pour profilé 30x30 - Für Profil 30x30	12

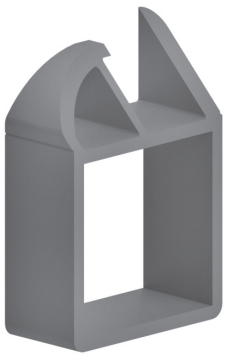

Grey polyamide
Poliammide grigio
Poliamida color gris
Polyamide gris
Polyamid grau

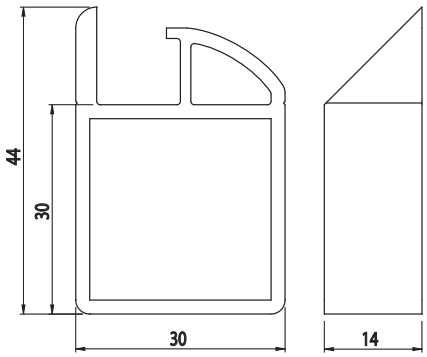

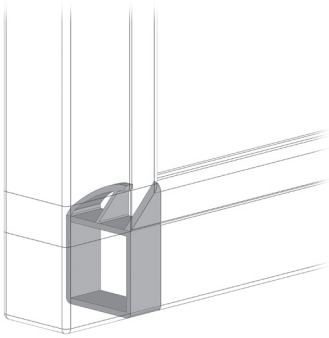

The reproduction of this catalogue is prohibited without authorization. We reserve the right to make changes to our products to enhance their features.

LEFT-HAND COLLAR Q30
COLLARE SINISTRO Q30
ABRAZADERA IZQUIERDA Q30
COLLIER GAUCHE Q30
ADAPTER FÜR STUFENFREIE VERBINDUNGEN LINKS Q30

Cod	Note	g
F030232	For 30x30 profile - Per profilo 30x30 - Para perfil 30x30 - Pour profilé 30x30 - Für Profil 30x30	12

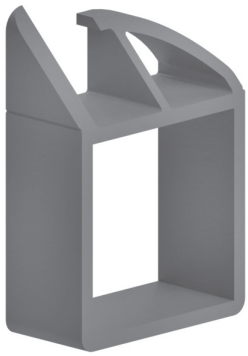

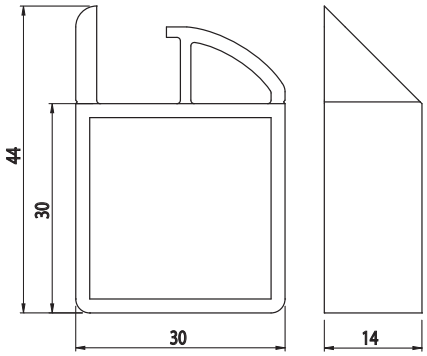

Grey polyamide
Poliammide grigio
Poliamida color gris
Polyamide gris
Polyamid grau

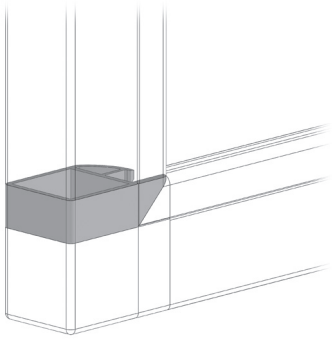

DOOR LEAF CLOSURE
SCROCCHETTO CHIUDI ANTA
CIERRE
LOQUET FERMETURE BATTANT
TÜRVERSCHLUSS

Cod	Note	g
084.517.001	Poliammide nero - Black polyamide - Poliamida color negro - Polyamide noir - Polyamid schwarz	34

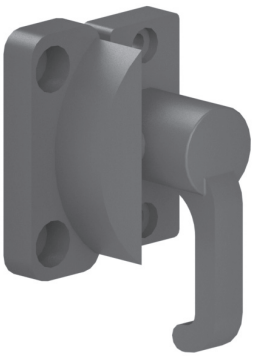

1 RH + 1 LH complete with self-tapping screws
1 Dx + 1 Sx completo di viti autofilettanti
1 dcho. + 1 izdo., incluye tornillos autorroscantes
1 droit + 1 gauche doté de vis taraudeuses
1 Re + 1 Li einschließlich gewindeformender Schrauben

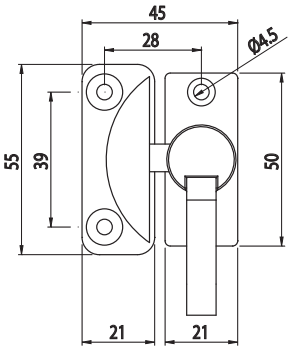

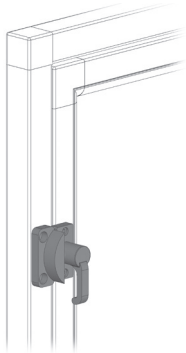

The reproduction of this catalogue is prohibited without authorization. We reserve the right to make changes to our products to enhance their features.

PANEL STOP
FERMAPANNELLO
RETÉN DE PANEL
FIXATION PANNEAU
PLATTENSTOPPER

Cod	Note	g
F043101	panel stop - fermapannello - retén de panel - fixation panneau - Plattenstopper	6

PVC

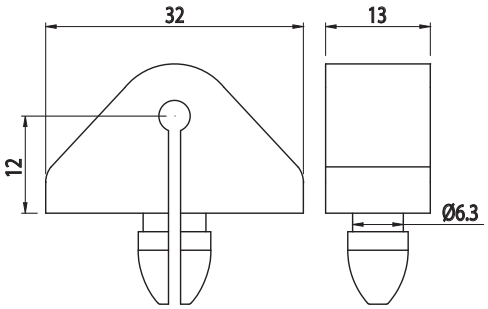

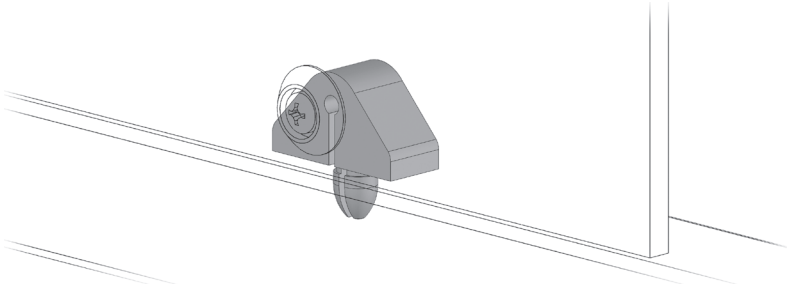

BELLOWS
SOFFIETTO
FUELLE
SOUFFLET
FALTTÜR

Cod	Note	g
F060104	Pin for folding doors - Perno per porte scorrevoli a soffietto - Perno para puertas corredizas con fuelle - Pivot pour portes coulissantes à soufflet - Bolzen für Faltschiebetüren	6

PVC

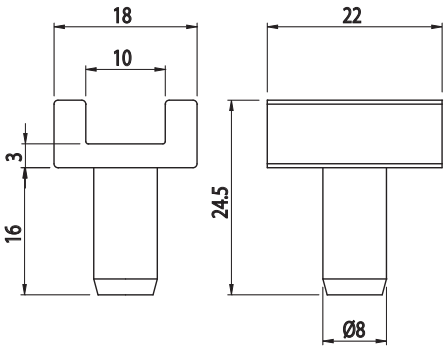

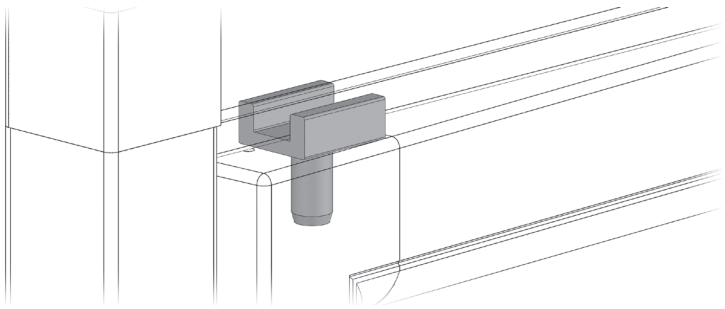

The reproduction of this catalogue is prohibited without authorization. We reserve the right to make changes to our products to enhance their features.

WHEEL FOR SLIDING
RUOTA PER SCORREVOLE
RUEDA PARA SISTEMA CORREDIZO
ROUE POUR PORTE COULISSANTE
RAD FÜR SCHIEBEKONSTRUKTION

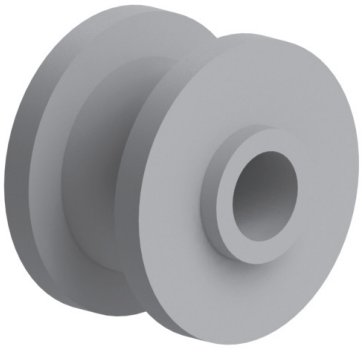

Cod	Note	g
T090044	Wheel for sliding doors - Ruota per porte scorrevoli - Rueda para puertas corredizas - Roue pour portes coulissantes - Rad für Schiebetüren	10

PVC

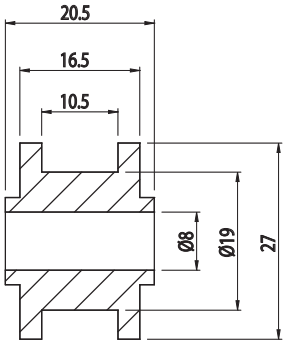

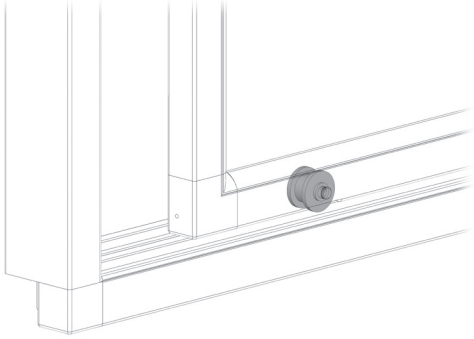

WHEEL PIN
PERNO PER RUOTA
PERNO PARA RUEDA
AXE DE ROUE
BOLZEN FÜR RAD

Cod	Note	g
T090045	Pin for sliding wheels on profile 25 - Perno per ruote scorrevoli su profilo 25 - Perno para ruedas corredizas sobre perfil de 25 - Pivot pour roues pour portes coulissantes sur profilé 25 - Bolzen für Räder für Schiebetüren an Profil 25	25

Steel
Acciaio
Acero
Acier
Stahl

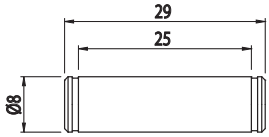

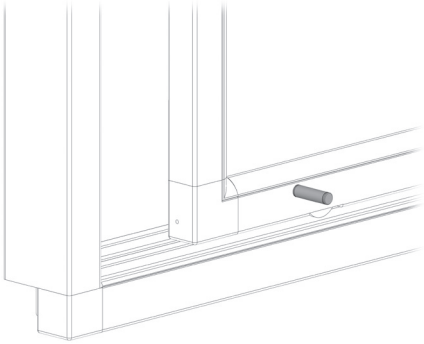

The reproduction of this catalogue is prohibited without authorization. We reserve the right to make changes to our products to enhance their features.

PIN FOR SAFETY ROTARY MICROSWITCH
PERNO PER MICRO ROTATIVO
PERNO PARA MICROINTERRUPTOR ROTATIVO
PIVOT POUR MICRO-CONTACTEUR ROTATIF
BOLZEN FÜR MIKRODREHSCHALTER

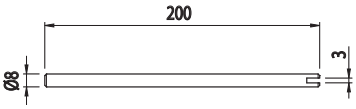

Cod	Note	g
084.531.001	For hinges 084.500.001 - 2 - 3 - 4 - 5 - 6 - Per cerniere 084.500.001 - 2 - 3 - 4 - 5 - 6 - Para bisagras 084.500.001 - 2 - 3 - 4 - 5 - 6 - Pour charnières 084.500.001 - 2 - 3 - 4 - 5 - 6 - Für Scharniere 084.500.001 - 2 - 3 - 4 - 5 - 6	91

Zinc plated steel
Acciaio zincato
Acero galvanizado
Acier zingué
Verzinkter Stahl

Examples pp. 285
Esempi pag. 285
Ejemplos pg. 285
Examples pg. 285
Beispiele S. 285

PIN FOR SAFETY ROTARY MICROSWITCH
PERNO PER MICRO ROTATIVO
PERNO PARA MICROINTERRUPTOR ROTATIVO
PIVOT POUR MICRO-CONTACTEUR ROTATIF
BOLZEN FÜR MIKRODREHSCHALTER

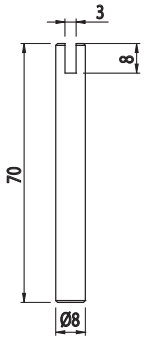

Cod	Note	g
084.533.002	Compatible with hinges 084.503.002 - 003 - Adatto alle cerniere 084.503.002 - 003 - Apto para las bisagras 084.503.002 - 003 - Adapté aux charnières 084.503.002 - 003 - Geeignet für Scharniere 084.503.002 - 003	27

Zinc plated steel
Acciaio zincato
Acero galvanizado
Acier zingué
Verzinkter Stahl

Examples pp. 285
Esempi pag. 285
Ejemplos pg. 285
Examples pg. 285
Beispiele S. 285

The reproduction of this catalogue is prohibited without authorization. We reserve the right to make changes to our products to enhance their features.

PIN FOR SAFETY ROTARY MICROSWITCH

PERNO PER MICRO ROTATIVO
PERNO PARA MICROINTERRUPTOR ROTATIVO
PIVOT POUR MICRO-CONTACTEUR ROTATIF
BOLZEN FÜR MIKRODREHSCHALTER

Cod	Note	g
084.608.001	Compatible with hinge 084.503.001 - Adatto alla cerniera 084.503.001 - Apto para la bisagra 084.503.001 - Adapté aux charnières 084.503.001 - Geeignet für Scharnier 084.503.001	65

Stainless steel
Acciaio inox
Acero inoxidable
Acier inox
Rostfreier Stahl

Examples pp. 285
Esempi pag. 285
Ejemplos pg. 285
Examples pg. 285
Beispiele S. 285

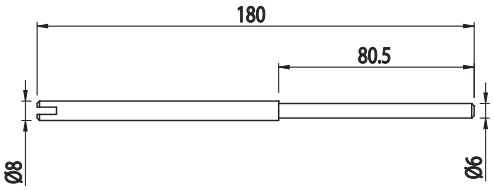

PLATE FOR MICROSWITCH

PIASTRA PER MICRO
PLACA PARA MICROINTERRUPTOR
PLAQUE POUR MICRO-CONTACT
PLATTE FÜR MIKROSCHALTER

Cod	Note	g
F038101	Microswitch fastening plate - Piastra fissaggio micro - Placa de fijación para microinterruptor - Plaque fixation micro-contact - Befestigungsplatte für Mikroschalter	20

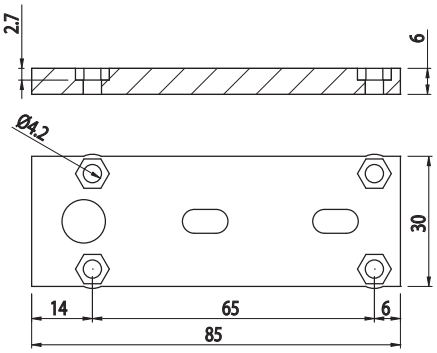

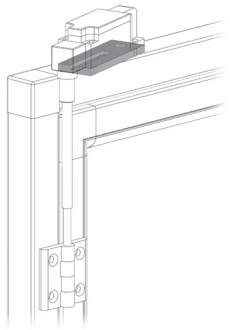

The reproduction of this catalogue is prohibited without authorization. We reserve the right to make changes to our products to enhance their features.

CASING FOR MICROSWITCH
CUFFIA PER MICRO
PROTECCIÓN PARA MICROINTERRUPTOR
CAPUCHON POUR MICRO-CONTACT
KAPPE FÜR MIKROSCHALTER

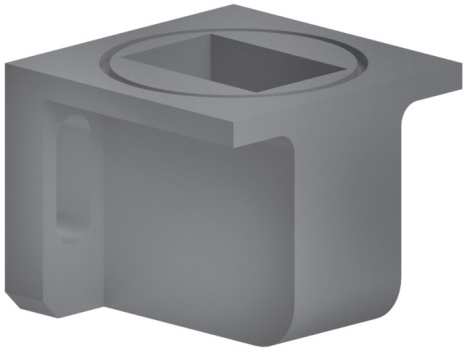

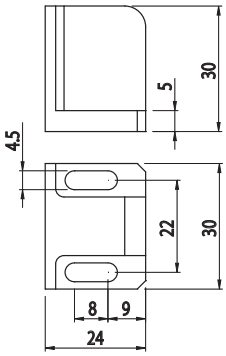

Cod	Note	g
F038102	Casing for microswitch - Cuffia per micro - Protección para microinterruptor - Capuchon pour micro-contact - Kappe für Mikroschalter	25

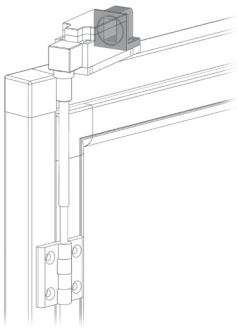

The reproduction of this catalogue is prohibited without authorization. We reserve the right to make changes to our products to enhance their features.

The reproduction of this catalogue is prohibited without authorization. We reserve the right to make changes to our products to enhance their features.

Alusic

INDEX

INDICE
ÍNDICE
INDEX
INDEX

CODE	PAGE
008VEKA103	84
008VEKA111	84
008VEKA115	84
008VEKA116	84
008VEKA117	84
008VEKA119	84
013.000.003	88
013.025.001	17
013.025.002	17
013.025.003	18
013.025.004	20
013.025.005	20
013.025.006	22
013.025.007	23
013.025.008	23
013.025.009	18
013.025.010	21
013.025.011	19
013.025.012	21
013.025.013	24
013.025.014	24
013.025.015	19
013.025.016	22
013.025.101	56
013.025.101B	56
013.025.102	57
013.025.102B	57
013.025.103	67
013.025.104	51
013.025.105	51
013.025.106	58
013.025.106B	58
013.025.107	59
013.025.108	52
013.025.109	52
013.025.110	53
013.025.111	53
013.025.112	59
013.025.113	58
013.025.114	60
013.025.115	69
013.025.116	69
013.025.117	72
013.025.118	72
013.025.121	67
013.025.122	61
013.025.123	73
013.025.124	76
013.025.125	76
013.025.128	71
013.025.131	71
013.025.132	62
013.025.135	56
013.025.136	57
013.030.001	25
013.030.002	25
013.030.003	26
013.030.004	27
013.030.005	28
013.030.006	29
013.030.007	31
013.030.008	30
013.030.009	26
013.030.010	28
013.030.011	32

CODE	PAGE
013.030.012	32
013.030.013	33
013.030.14	30
013.030.015	27
013.030.016	29
013.030.017	31
013.030.018	33
013.030.019	34
013.030.020	34
013.030.021	35
013.030.022	35
013.030.051	35
013.030.101	62
013.030.101B	62
013.030.102	63
013.030.102B	63
013.030.103	68
013.030.104	54
013.030.105	54
013.030.106	63
013.030.107	64
013.030.112	65
013.030.113	64
013.030.114	65
013.030.115	70
013.030.116	70
013.030.117	74
013.030.118	75
013.030.121	68
013.030.122	66
013.030.123	75
013.030.124	77
013.030.125	77
013.030.128	73
013.030.131	74
013.030.132	55
013.030.133	55
013.100.001	17
013.100.002	25
013.100.003	109
013.100.004	110
013.100.005	111
013.100.006	110
013.100.007	111
013.100.008	112
013.100.009	113
013.100.010	114
013.100.011	117
013.100.012	117
013.100.013	114
013.100.015	43
013.100.016	44
013.100.017	44
013.100.018	45
013.100.019	45
013.100.020	113
013.100.021	92
013.100.022	127
013.100.023	127
013.100.025	120
013.100.026	96
013.100.027	86
013.100.028	87
013.100.029	93
013.100.030	121

CODE	PAGE
013.100.031	121
013.100.032	122
013.100.033	122
013.100.034	120
013.100.035	90
013.100.036	91
013.100.037	94
013.100.038	115
013.100.039	115
013.100.040	116
013.100.041	116
013.100.042	35
013.100.043	34
013.100.044	112
013.100.045	125
013.100.046	49
013.100.047	49
013.100.048	49
013.100.049	48
013.100.050	125
013.100.052	126
013.100.053	128
013.100.054	118
013.100.055	97
013.100.056	107
013.100.057	107
013.100.058	108
013.100.059	108
013.100.060	95
013.100.061	126
013.100.062	130
013.100.063	130
013.100.064	128
013.100.066	119
013.100.067	119
013.100.068	119
013.100.069	119
013.100.071	109
013.100.072	44
013.100.073	45
013.100.074	45
013.202.001	50
013.506.003	100
013.506.004	101
013.506.004T	102
013.506.006	104
013.506.007	103
013.506.008	99
013.506.009	99
013.506.010A	99
013.506.010A	99
013.506.010G	99
013.506.010G	99
013.512.001	80
013.512.002	81
013.512.003	81
013.818.001	132
013.818.002	132
013.818.003	133
013.818.004	133
013.818.005	134
030LEX	82
031LEX	82
032LEX	82
034LEX	82

The reproduction of this catalogue is prohibited without authorization. We reserve the right to make changes to our products to enhance their features.

CODE	PAGE
035LEX	82
062LEX	83
084.101.092	36
084.101.093	36
084.201.096	36
084.202.009	49
084.203.001	88
084.203.001G	89
084.301.040	42
084.302.003	42
084.302.008	43
084.303.009	46
084.303.010	47
084.305.006	129
084.305.016	129
084.312.005	46
084.312.007	46
084.312.015	46
084.402.003	78
084.402.007	78
084.402.009	78
084.403.003	79
084.500.012	87
084.501.008	95
084.503.001	86
084.504.001	98
084.506.004P	102
084.506.005A	98
084.506.005B	98
084.506.005N	98
084.506.006PA	105
084.506.008	100
084.506.009A	105
084.506.009B	106
084.506.009PA	106
084.509.001	118
084.509.002	47
084.509.004	48
084.512.003T	80
084.512.006T	80
084.512.014T	80
084.512.015T	80
084.512.016T	80
084.512.017	82
084.517.001	162
084.523.001	121
084.527.001	123
084.527.002	123
084.527.003	123
084.527.004	123
084.527.005	123
084.527.006	123
084.527.007	123
084.527.008	123
084.527.009	123
084.527.010	123
084.527.011	123
084.527.012	123
084.527.013	123
084.527.014	123
084.528.001	124
084.528.002	124
084.531.001	165
084.533.002	165
084.533.004	96

CODE	PAGE
084.604.004	131
084.608.001	166
084.818.010	134
0130.000.003A	88
670.001.000	85
2965UNI6954	41
3919UNI6954	41
3932UNI7504M	41
4216ISO7050	41
4216UNI6954	41
4222ISO7050	41
4822ISO7050	41
B25021A	145
B25022A	146
B25024A	146
B25025A	145
B30030A	147
B30031A	147
B30032A	148
B30033A	148
B30034A	150
B30040A	149
B30050A	150
B30052A	149
C030125	145
C030130	147
C030209	78
DILITE3	83
DILITE4	83
F025101	151
F025102	152
F025103	153
F025105	153
F025107	152
F025115	155
F025145	155
F025201	151
F025215	160
F025245	160
F025290	159
F030101	156
F030102	157
F030103	158
F030107	157
F030115	158
F030145	159
F030201	156
F030231	161
F030232	162
F030290	161
F038101	166
F038102	167
F043101	163
F060104	163
RETE 11X66	85
RETE 11X66 INOX	85
RETE 40X40X4	85
RETE TEC 1003	85
STR3MM	84
STR4MM	84
STR5MM	84
T025105DX	154
T025105SX	154
T090044	164
T090045	164

CODE	PAGE

The reproduction of this catalogue is prohibited without authorization. We reserve the right to make changes to our products to enhance their features.

The reproduction of this catalogue is prohibited without authorization. We reserve the right to make changes to our products to enhance their features.

The reproduction of this catalogue is prohibited without authorization. We reserve the right to make changes to our products to enhance their features.

The reproduction of this catalogue is prohibited without authorization. We reserve the right to make changes to our products to enhance their features.

Progetto grafico e impaginazione Sicoservice, Mondovì (CN)
Finito di stampare nel mese di -
presso -

SP LINE

ED.17 UPD. 03

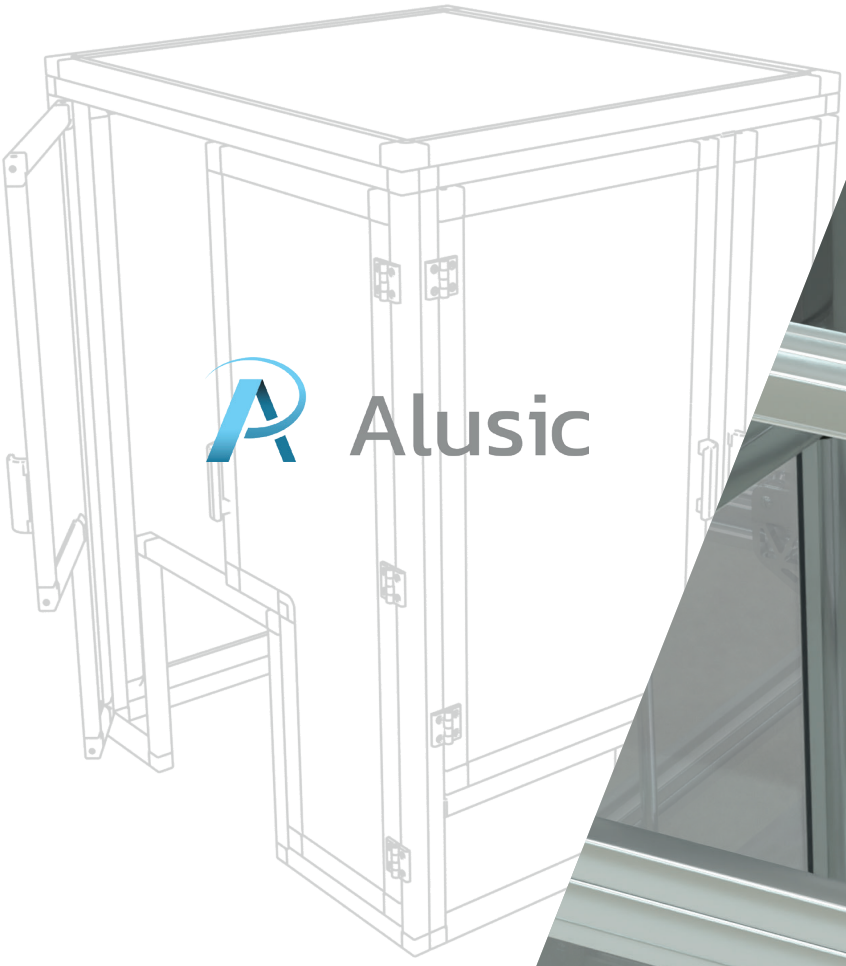

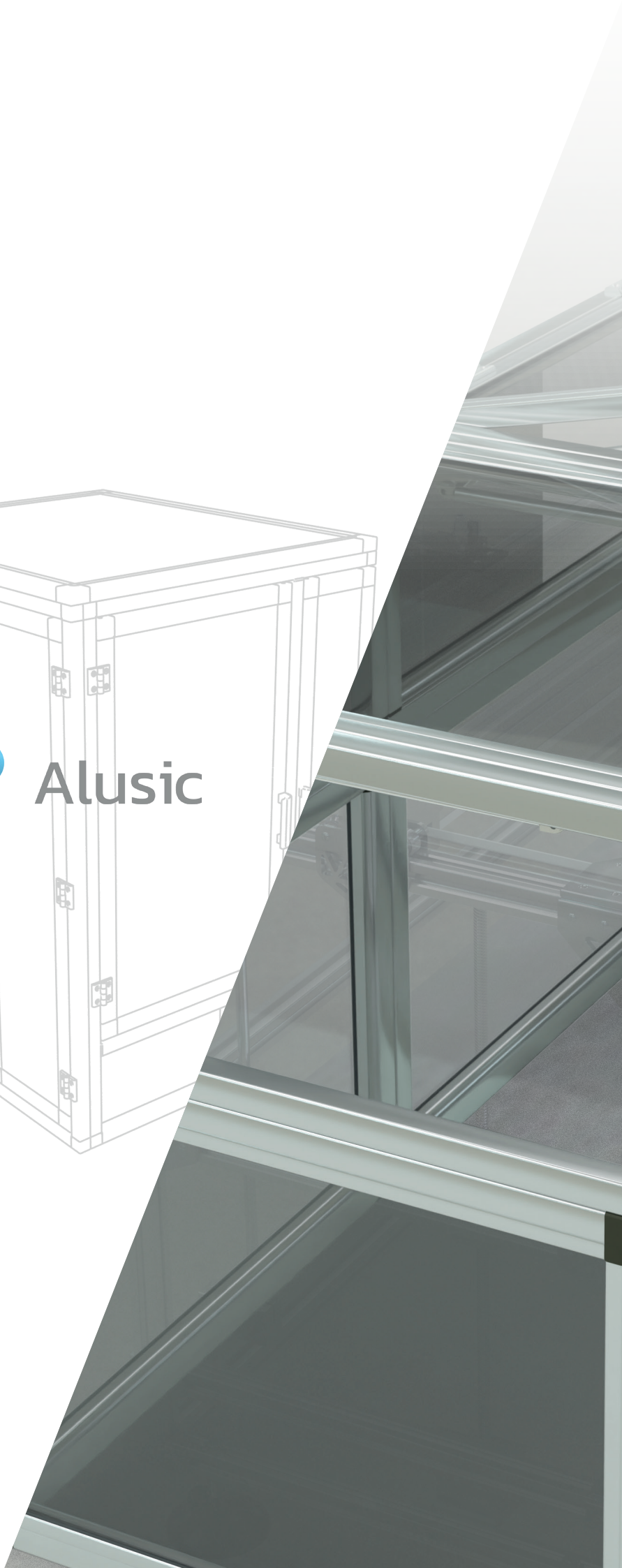

ALUSIC S.R.L.
VIA BOLOGNA, 10/A - 12084 - MONDOVÌ (CN) - ITALY
TEL.: (+39) 0174.55.29.49 - FAX: (+39) 0174.47.975
SKYPE: sic.com - MAIL: contact@alusic.com
www.alusic.com
copyright - 05/2023